Wings PUMPS

Submersible Sewage Pumps

New-generation mechanical/electrical sewage electric submersible pumps from ***Wings Pumps*** provides high reliability, reduced installation and maintenance costs, with a longer lifetime.

37/1 Soi Tiwanon 48, Tiwanon Rd.,
T.Thasai, A.Muang, Nonthaburi 11000
Tel: +66 2 580 8011 - 4
www.wgflow.com
Wiroon & Gwyness

APPLICATIONS

Storm Water Drainage

Supports structures, channels and pipes that carry stormwater (rain water) to ponds, lakes, streams and rivers.

Irrigation and Aquaculture

Used for irrigation and aquaculture ecosystems. Environmentally-friendly.

Raw Water and Processed Water

Supports raw water intakes and applicable intakes for water treatment plants.

Sewage and Recirculation Sludge

Designed to move the thickest mixtures and pass large pieces of debris without damage or wear on the pump.

Municipality

Well-Integrated with municipality work and projects with high requirements.

Renewable Energy

can be used with solar cells for sustainable energy with smart device that properly manage the process and prevent pump damage.

KEY BENEFITS

Better Power Consumption

Save more power with Premium Efficiency Motors.

Stability and Reliability

Wings Pumps' advanced engineering provides better stability and reliability.

Wide Range of Operations

Wings Pumps are more versatile and can be used in a wide variety of operations.

High Flexibility in Installations

Wings Pumps can be installed perfectly in various situations and setups.

Flexibility in Material

Customize pumps with various material and composites to better suit your operations.

Internet of things

Through the cloud network system, the system organizes data and keeps tabs on the pump's operational state. User can be real-time observation possible.

FEATURES AND BENEFITS

Our new-generation mechanical/electrical sewage electric ***submersible pumps*** from ***Wings Pumps*** provides high reliability, reduced installation and maintenance costs, with a longer lifetime.

series submersible sewage pumps feature compact structure, high efficiency,ciency area, anti-winding, non-clogging, auto coupling, high reliability, auto protecticontrol. The pumps offer unique functions in the pumping of solid particles and long-fiber waste.

Our ***Premium Efficiency Motors*** are manufactured according to IEC 60034-30 IE3 standards, providing improved efficiency, reduced energy consumption with less impact on the environment.

Wings Pumps are engineered and designed with ***Computational Fluid Dynamics*** (CFD) combined with predictive AI and powerful graphics for visualizations and simulations to foresee any multi-dimensional problems.

Our ***self-cleaning propeller*** blade design decreases clogging and minimizes risks caused by liquids containing fibrous material or sludge.

A slim design offers easy installation, low vibration and low Net Positive Suction Head (NPSH)

Smart technology, highly intelligent controls with 8 points of sensor monitoring devices with optional AI and IoT expansions.

Our special Coating offers higher resistance to abrasive and corrosive effects

ISO 9001 & ISO14001 & ISO45001 certified. With ISO certification, Wings Pumps provides reliability with a high standard giving you assurance and peace of mind.

able to operate at a high performance for longer than 12 hours.

SUBMERSIBLE SEWAGE PUMP

1. Insulated Motor - for better reliability

All motors are fully submersible to a depth of at least 20 meters.

2. Unique seals provide extra safety

Our mechanical seal systems minimize shaft overhang while maximizing cooling and lubrication.

3. Sensors

Thermal sensors help prevent overheating. Leakage sensors alarms you of liquid intrusion through cables or seals.

4. Reliable and Efficient Hydraulics

Wings Pumps technology ensures maximum reliability and high efficiency.

5. Flexible Installation

Wings are designed according to the requirements of customer and suitability according to the actual situation

6. Spare Parts

All models will have stock spare parts for at least five years,
and WINGS' skilled staff will help you find the right part and give you advice on spare parts.

PREMIUM EFFICIENCY MOTORS (IE3) IN ACCORDANCE WITH IEC60034-30,IEC60529

Class F Insulation (Up to 155°C/311°F)

Temperature rise according to IEC / NEMA Class A

Class H Insulation (Up to 180°C/356°F)

Temperature rise according to IEC / NEMA Class A

International Protection Standard IP68

International Protection Standard according to IEC 60529/DIN 40050

Better Savings on Power Consumption

Our highly efficient motors provide more savings with lower power consumption.

Better for the Environment

Our pumps are designed to be more more environmentally-friendly and have minimal impact on any ecosystem.

DOUBLE MECHANICAL SEAL

Double mechanical seals are designed to ensure maximum sealing safety. These seals virtually eliminate leakage of the fluid being handled in pumps. Made by SiC, Carbon, Cement Carbide and special requires.

37/1 Soi Tiwanon 48, Tiwanon Rd.,
T.Thasai, A.Muang, Nonthaburi 11000
Tel: +66 2 580 8011 - 4
www.wgflow.com
Wiroon & Gwyness

Application

The pumps are widely applied in the pumping of sewage and solid waste containing particles and fiber for chemical, petroleum, pharmaceutical, mining, paper-making, cement, steel-making, power generation and coal processing industries as well as water supply and sewage system of municipal sewage treatment plants, municipal engineering and construction sites. They can also be used to pump clear water or corrosive medium. Depending on water quality, materials of the pumps include: plain cast iron, cast steel, high chromium steel, wear-resistant steel and stainless steel.

Main Application

1. Motor rated voltage: 380V. In addition, three-phase AC power supply with a voltage of 200~600V, 3kV, 6kV or 10kV can also be used.
2. Temperature of pumped medium < 40C; Maximum depth: 20m ; pH : 4~10 ; Density<1150kg/m^3 Solid volume ratios 5%.

Product Model Instruction

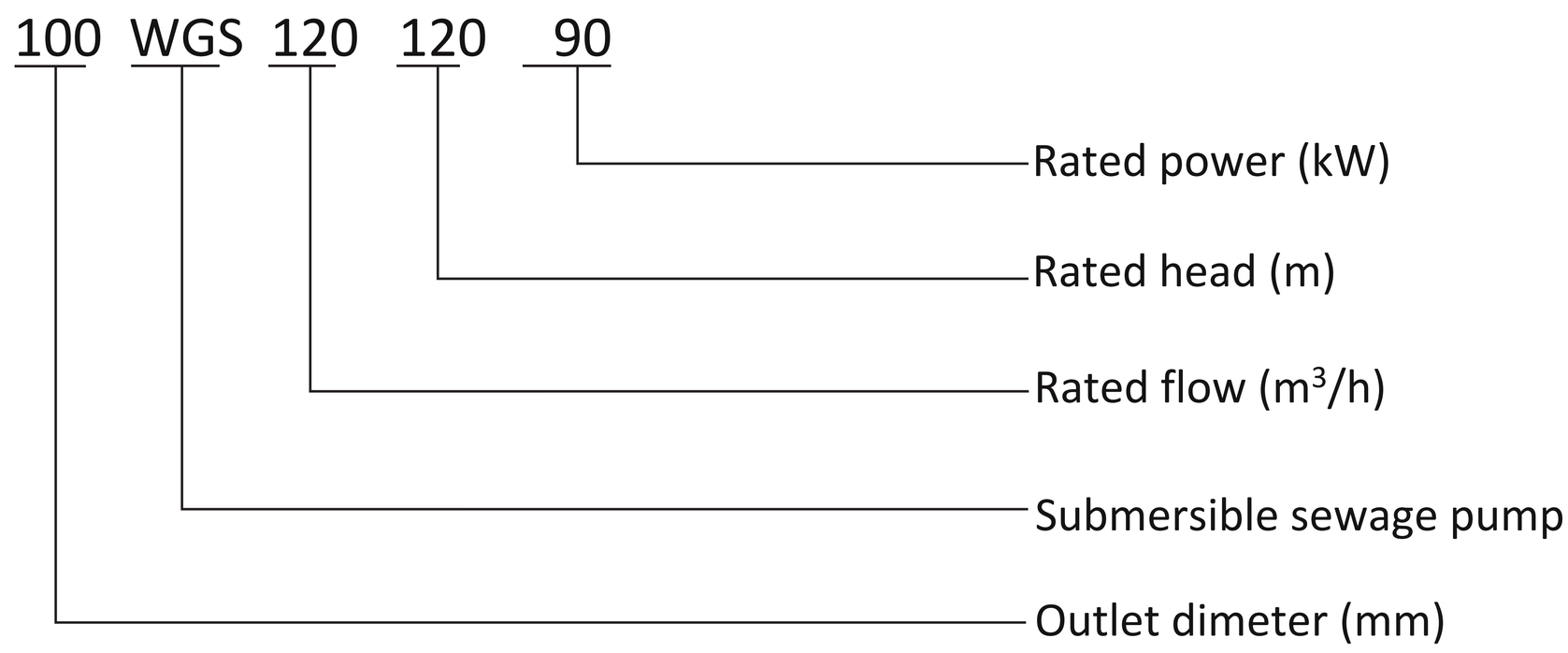

Product Structure Features

1. The international advanced Ansys-CFX software is adopted in the optimization of bydraulic parts so as to improve hydraulic performance of the pumps and raise their efficiency to a world-leading level.
2. The international advanced Ansys software is adopted in the scientific calculation and analysis of pump structure so as to extend the service life of bearings and mechanical scals and reduce vibration and noise.
3. Pumps used on medium with rich fiber content are arranged with cutting and tearing devices at the inlet to prevent clogging and jamming which may cause severe vibration when pumping medium containing fiber and solid particles.

37/1 Soi Tiwanon 48, Tiwanon Rd.,
T.Thasai, A.Muang, Nonthaburi 11000
Tel: +66 2 580 8011 - 4
www.wgflow.com
Wiroon & Gwyness

Product Structure Features

1. The international advanced Ansys-CFX software is adopted in the optimization of bydraulic parts so as to improve hydraulic performance of the pumps and raise their efficiency to a world-leading level.

2. The international advanced Ansys software is adopted in the scientific calculation and analysis of pump structure so as to extend the service life of bearings and mechanical scals and reduce vibration and noise.

3. Pumps used on medium with rich fiber content are arranged with cutting and tearing devices at the inlet to prevent clogging and jamming which may cause severe vibration when pumping medium containing fiber and solid particles.

4. The cable outlet adopts a unique structure to avoid water lcakage, clectric lcakage, short circuit and stator coil burning caused by human pulling, cable jacket damage or cable aging, thereby effectively reducing the probability of malfunctioning caused by flooding in the upper part of pump.

5. Considering all conditions that may take place during starting and operating, a number of warning sensors are installed inside the pumps to monitor conditions such as leakage in wiring chamber,motor cavity and oil house as well as temperature rise in upper and lower bearings and motor coil.

6. Patented structure is adopted in the pumps. Three sets of mechanical seals are used inside the pumps. A buffer chamber is added. The small amounts of water caused by normal leakage in the scal of the lower shaft accumulate in the seal buffer chamber. With the protection of the three sets of high-quality mechanical seals and the large accumulating capacity of the buffer chamber, sealing is made significantly more reliable to completely ensure the reliable operation of pumps. Submersible pumps of 22kW and above adopt self-circulation cooling system to ensure continued working when motor is elevated above water.

7. Auxiliary impeller structure helps to balance with the pressure outside the mechanical seal and prevent water from entering the oil house, so as to extend the service life of pumps.

Section Submersible Sewage Pump

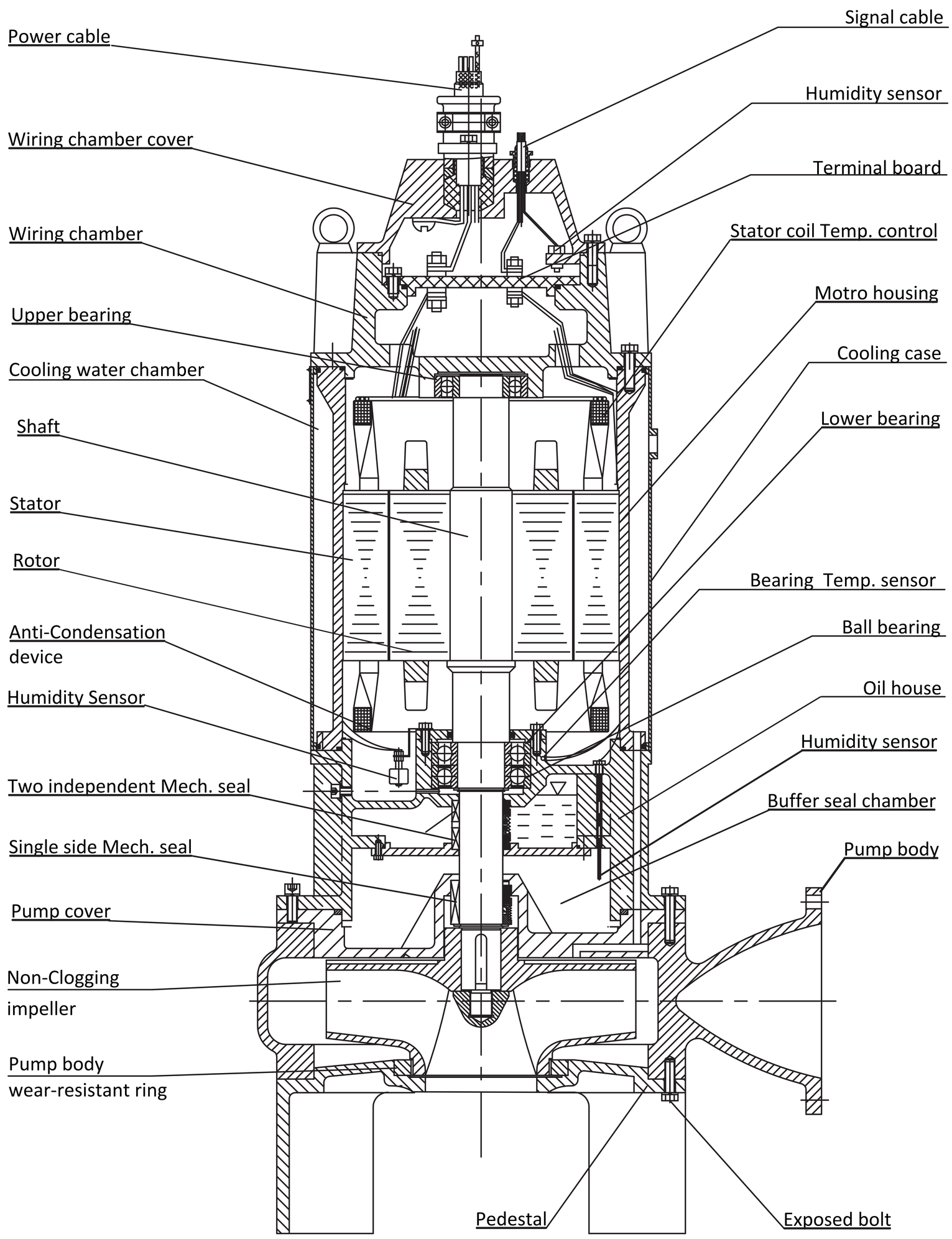

Material of Main Parts

	Name		Material
1	Impeller,Cover		Ductile iron,Cast iron,SUS304,SUS316
2	Casing,Terminal box,Bracket		FC 200,250
3	Shaft		SUS 420,431
4	Wear Ring		FC 200,250
5	Motor Insulation		155˚C F Grade, 180˚C H Grade
6	Bearing Brand		SKF,NTK
7	Mechanical Seal	Brand	Burgman
		Motor side friction pairs	Graphite/silicon carbide
		Pump side friction pairs	Silicon carbide/tungsten carbide
8	O-ring		Nitrile rubber
9	Cable Seal RIng		

Overall Performance Curve

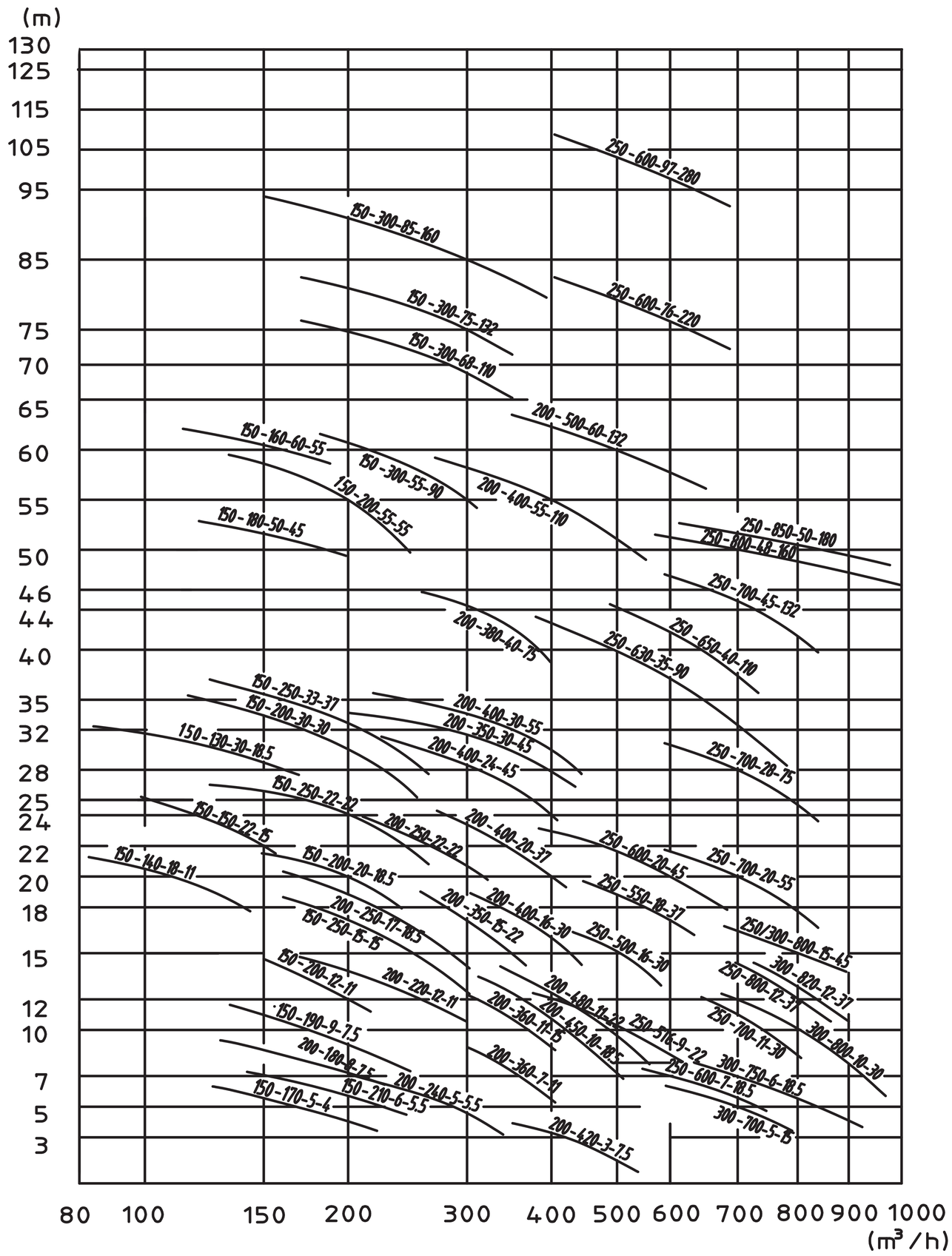

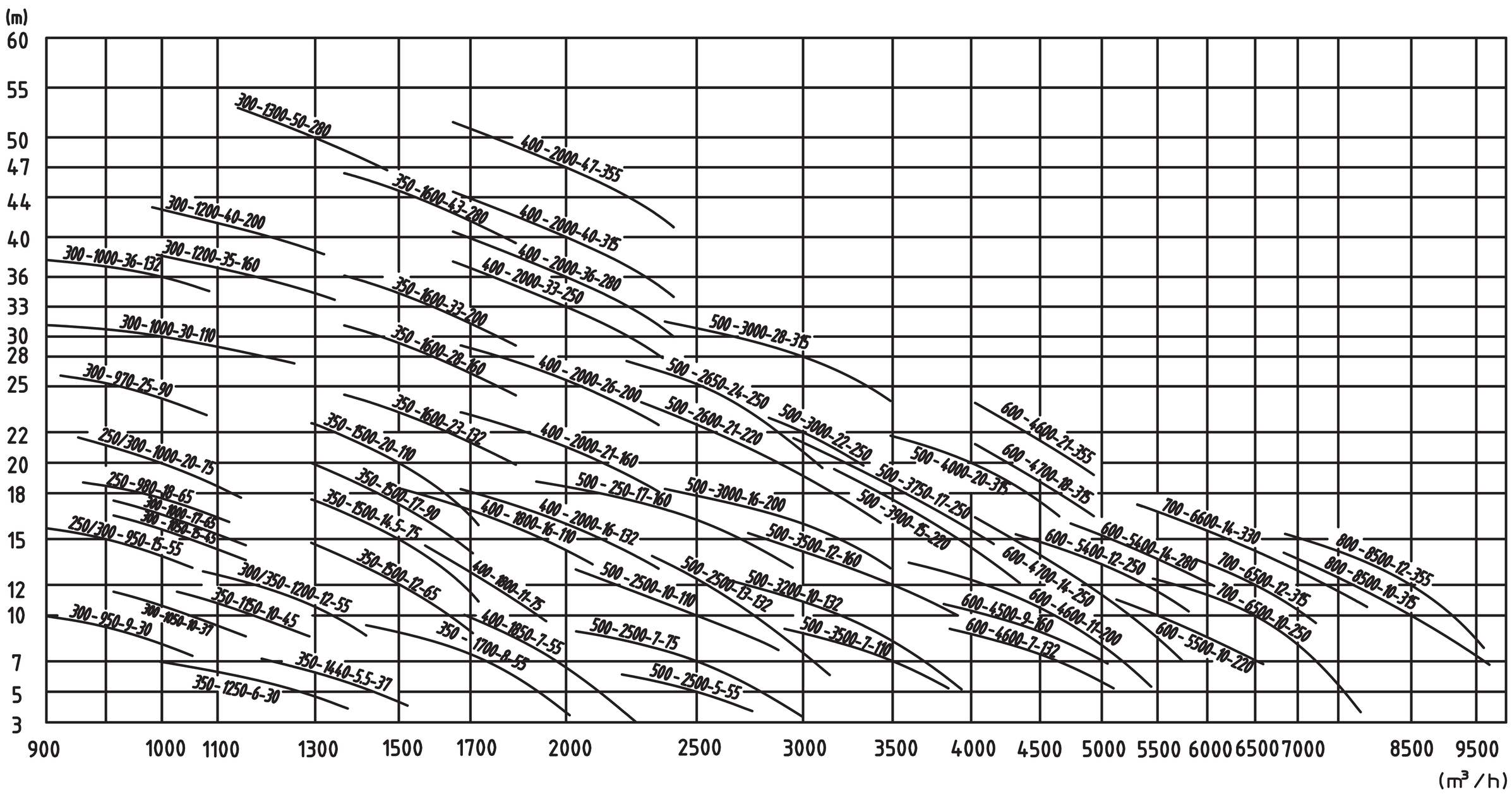

Overall Performance Table

ProductModel Instruction

100 WGS 120 120 90

- 90 — Rated power (kW)
- 120 — Rated head (m)
- 120 — Rated flow (m^3/h)
- WGS — Submersible sewage pump
- 100 — Outlet dimeter (mm)

No.	Model	Flow		Head	Rotate Speed	Motor Power	Pump Efficiency	Passed Solids
		(m^3/h)	(m^3/s)	(m)	(r/min)	(kw)	(%)	mm
1	150WGS170-5-4	170	0.05	4	1450	4.0	68	84
2	150WGS210-6-5.5	210	0.06	6	1450	5.5	70	84
3	150WGS190-9-7.5	190	0.05	6	1450	7.5	72	97
4	150WGS200-12-11	200	0.06	12	1450	11.0	73	97
5	150WGS140-18-11	140	0.04	18	1450	11.0	78	75
6	150WGS150-22-15	150	0.04	22	1450	15.0	78	75
7	150WGS250-15-15	250	0.07	15	1450	15.0	75	96
8	150WGS130-30-18.5	130	0.04	30	1450	18.5	72	96
9	150WGS200-20-18.5	200	0.06	20	1450	18.5	78	87
10	150WGS250-22-22	250	0.07	22	1450	22.0	80	87
11	150WGS200-30-30	200	0.06	30	1450	30.0	78	85
12	150WGS170-45-37	170	0.05	45	1450	37.0	67	45
13	150WGS250-33-37	250	0.07	33	1450	37.0	70	72
14	150WGS180-50-45	180	0.05	50	1480	45.0	65	45
15	150WGS230-38-45	230	0.06	38	1480	45.0	67	45
16	150WGS160-60-55	150	0.04	60	1480	55.0	63	45
17	150WGS200-55-55	200	0.06	55	1480	55.0	66	45
18	150WGS300-35-55	300	0.08	35	1450	55.0	70	55
19	150WGS300-45-75	300	0.08	55	1450	110.0	70	55
20	150WGS300-55-90	300	0.08	55	1450	110.0	68	55
21	150WGS300-68-110	300	0.08	65	1450	110.0	65	72
22	150WGS300-75-132	300	0.08	75	1450	132.0	60	52
23	150WGS300-85-160	300	0.08	85	1450	160.0	60	52
24	200WGS180-8-7.5	180	0.05	8	980	7.5	75	84
25	200WGS250-6-7.5	250	0.07	6	1450	7.5	65	97
26	200WGS420-3-7.5	420	0.12	3	1450	7.5	65	134
27	200WGS350-5-7.5	350	0.10	5	1450	7.5	72	134
28	200WGS220-12-11	220	0.06	12	1450	11.0	73	97
29	200WGS360-7-11	360	0.10	7	1450	11.0	76	134
30	200WGS360-11-15	360	0.10	10	1450	15.0	75	100
31	200WGS250-17-18.5	250	0.07	17	1450	18.5	78	87
32	200WGS450-10-18.5	450	0.13	10	1450	18.5	78	113
33	200WGS250-22-22	250	0.07	22	1450	22	80	87
34	200WGS350-15-22	350	0.10	15	1450	22	77	113
35	200WGS480-11-22	480	0.13	11	1450	22	78	113
36	200WGS400-16-22	400	0.11	16	1450	30	76	113
37	200WGS400-20-37	400	0.11	20	1450	37	75	105
38	200WGS350-30-45	350	0.10	30	1450	45	78	83
39	200WGS400-24-45	400	0.11	24	1450	45	76	118
40	200WGS400-30-55	400	0.11	30	1450	55	76	118
41	200WGS380-40-75	380	0.11	40	1450	75	70	76
42	200WGS400-45-90	400	0.11	45	1450	90	70	76
43	200WGS400-55-110	400	0.11	55	1450	110	70	76
44	200WGS500-60-132	50	0.14	60	1450	137	73	76
45	250WGS500-4-7.5	500	0.14	4	980	7.5	76	120
46	250WGS500-6-11	500	0.14	6	980	11	79	120
47	250WGS576-9-22	576	0.16	9	980	22	77	120
48	250WGS600-7-18.5	700	0.19	7	1470	18.5	70	120
49	250WGS700-7-22	700	0.19	7	1470	22	70	120
50	250WGS500-16-30	500	0.14	16	1450	30	78	110
51	250WGS700-11-30	700	0.19	11	1450	30	78	110
52	250WGS550-18-37	550	0.15	18	1450	37	78	110
53	250WGS800-12-37	800	0.22	12	1450	37	78	120
54	250WGS600-20-45	600	0.17	20	1450	45	80	110
55	250WGS800-15-45	800	0.22	15	1450	45	80	120
56	250WGS700-20-55	700	0.19	20	1450	55	78	110
57	250WGS700-28-75	700	0.19	28	1450	75	78	120
58	250WGS950-15-55	950	0.26	15	990	55	80	133
59	250WGS980-18-65	1000	0.28	18	990	75	80	133
60	250WGS1000-20-75	1000	0.28	20	990	75	80	133
61	250WGS630-35-90	650	0.18	35	1480	90	78	100
62	250WGS650-40-110	650	0.18	40	1450	110	79	100
63	250WGS700-45-132	700	0.19	45	1450	132	78	100
64	250WGS800-48-160	810	0.23	48	1450	160	80	100
65	250WGS850-50-180	850	0.24	50	1450	180	80	100
66	250WGS600-76-220	600	0.17	76	1450	220	70	54
67	250WGS600-97-280	600	0.17	97	1450	280	70	54
68	300WGS700-5-15	700	0.19	5	980	15	76	120
69	300WGS750-6-18.5	750	0.21	6	980	18.5	73	125
70	300WGS750-7-22	750	0.21	7	980	22	75	125
71	300WGS800-10-30	800	0.22	10	1450	30	80	120
72	300WGS950-9-30	950	0.26	9	980	30	81	150
73	300WGS820-12-37	820	0.23	12	1450	37	80	120
74	300WGS1050-10-37	1050	0.29	10	980	37	82	150
75	300WGS800-15-45	800	0.22	15	1450	45	80	120
76	300WGS1050-15-45	1050	0.29	15	1450	45	75	120
77	300WGS950-15-55	950	0.26	15	990	55	81	133
78	300WGS1200-12-55	1200	0.33	12	990	55	80	133
79	300WGS1000-17-65	1000	0.28	17	980	65	80	133
80	300WGS1000-20-75	1000	0.28	20	980	75	81	133
81	300WGS970-25-90	980	0.27	25	980	90	82	82
82	300WGS1000-30-110	1000	0.28	30	980	110	82	83
83	300WGS1000-36-132	1000	0.28	36	980	132	81	83
84	300WGS1200-35-160	1200	0.33	35	980	160	80	76
85	300WGS1200-40-200	1200	0.33	40	980	200	81	76
86	300WGS1300-50-280	1300	0.36	50	980	280	81	76
87	350WGS1250-6-30	1250	0.35	6	980	30	75	150

37/1 Soi Tiwanon 48, Tiwanon Rd.,
T.Thasai, A.Muang, Nonthaburi 11000
Tel: +66 2 580 8011 - 4
www.wgflow.com
Wiroon & Gwyness

Wings PUMPS

No.	Model	Flow		Head	Rotate Speed	Motor Power	Pump Efficiency	Passed Solids
		(m³/h)	(m³/s)	(m)	(r/min)	(kw)	(%)	mm
88	350WGS1440-5.5-37	1440	0.40	5.5	980	37	72	150
89	350WGS1150-10-45	1150	0.32	10.0	980	45	80	150
90	350WGS1200-12-55	1200	0.33	12.0	980	55	73	170
91	350WGS1700-8-55	1700	0.47	8.0	980	55	80	170
92	350WGS1500-12-65	1500	0.42	12.0	980	65	81	170
93	350WGS1500-14.5-75	1500	0.42	14.5	980	75	80	170
94	350WGS1500-17-90	1500	0 .42	17.0	980	90	81	170
95	350WGS1500-20-110	1500	0.42	20.0	980	110	80	140
96	350WGS1600-23-132	1600	0.44	23.0	980	132	81	140
97	350WGS1600-28-160	1600	0.44	28.0	980	160	81	140
98	350WGS1600-33-200	1600	0.44	33.0	980	200	80	125
99	350WGS1600-43-280	1600	0.44	45.0	980	280	81	125
100	400WGS1850-7-55	1850	0.51	7.0	980	55	80	170
101	400WGS1800-11-75	1800	0.50	11.0	980	75	81	170
102	400WGS1800-13.5-90	1800	0.50	13.5	980	90	81	170
103	400WGS1800-16-110	1800	0.50	16.0	980	110	81	170
104	400WGS2000-16-132	2000	0.56	16.0	980	132	81	150
105	400WGS2000-21-160	2000	0.56	21.0	980	160	82	150
106	400WGS2000-26-200	2000	0.56	26.0	980	200	81	150
107	400WGS2000-33-250	2000	0.56	33.0	980	250	81	125
108	400WGS2000-36-280	2000	0.56	36.0	980	280	81	125
109	400WGS2000-40-315	2000	0.56	40.0	980	315	75	125
110	400WGS-1500-47-355	1500	0.42	47.0	980	355	75	125
111	500WGS2500-5-55	2500	0.69	5.0	740	55	78	170
112	500WGS2500-7-75	2500	0.69	7.0	740	75	75	170
113	500WGS2500-10-110	2500	0.69	10.0	740	110	80	170
114	500WGS3500-7-110	3500	0.97	7.0	740	110	78	190

No.	Model	Flow		Head	Rotate Speed	Motor Power	Pump Efficiency	Passed Solids
		(m³/h)	(m³/s)	(m)	(r/min)	(kw)	(%)	mm
115	500WGS2500-13-132	2500	0.69	13.0	740	132	80	170
116	500WGS3200-10-132	3200	0.89	10.0	740	132	78	190
117	500WGS2500-17-160	2500	0.69	17.0	980	160	81	170
118	500WGS3500-12-160	3500	0.97	12.0	740	160	81.5	190
119	500WGS2600-21-220	2600	0.72	21.0	980	220	82	190
120	500WGS3000-16-200	3000	0.83	16 .0	980	200	82	190
121	500WGS3900-15-220	3900	1.08	15.0	740	220	83	190
122	500WGS2650-24-250	2650	0.74	24 .0	980	250	82	190
123	500WGS3000-22-250	3000	0.83	22.0	980	250	82	190
124	500WGS3750-17-250	3750	1.04	17.0	740	250	82	190
125	500WGS3000-28-315	3000	0.83	28.0	740	315	83	190
126	500WGS4000-20-315	4000	1.11	20.0	740	315	83	190
127	600WGS4600-7-132	4600	1.28	7.0	980	132	78	230
128	600WGS4500-9-160	4500	1.25	9.0	740	160	80	230
129	600WGS4600-11-200	4600	1.28	11.0	740	200	83	230
130	600WGS5500-10-220	5500	1.53	10.0	740	220	81	230
131	600WGS4700-14-250	4700	1.31	14.0	740	250	82	230
132	600WGS5400-12-250	5400	1.50	12.0	740	250	81	250
133	600WGS5400-14-280	5400	1.50	14.0	740	280	81	250
134	600WGS4700-18-315	4700	1.31	18.0	740	315	82	210
135	600WGS4600-21-355	4600	1.2 8	21.0	740	355	82	210
136	700WGS6500-7-200	6500	1.81	7.0	980	200	78	250
137	700WGS6500-10-250	6500	1.81	10.0	980	250	83	250
138	700WGS6500-12-315	6500	1.81	12.0	740	315	84	250
139	700WGS6600-14-330	6600	1.83	14.0	590	330	84	250
140	800WGS8500-10-315	8500	2.36	10.0	590	315	82	280
141	800WGS8500-12-355	8500	2.36	12.0	590	355	83	280

37/1 Soi Tiwanon 48, Tiwanon Rd.,
T.Thasai, A.Muang, Nonthaburi 11000
Tel: +66 2 580 8011 - 4
www.wgflow.com
Wiroon & Gwyness

Installation type

Movable installation includes two connection modes, namely head tube connection and hose conection

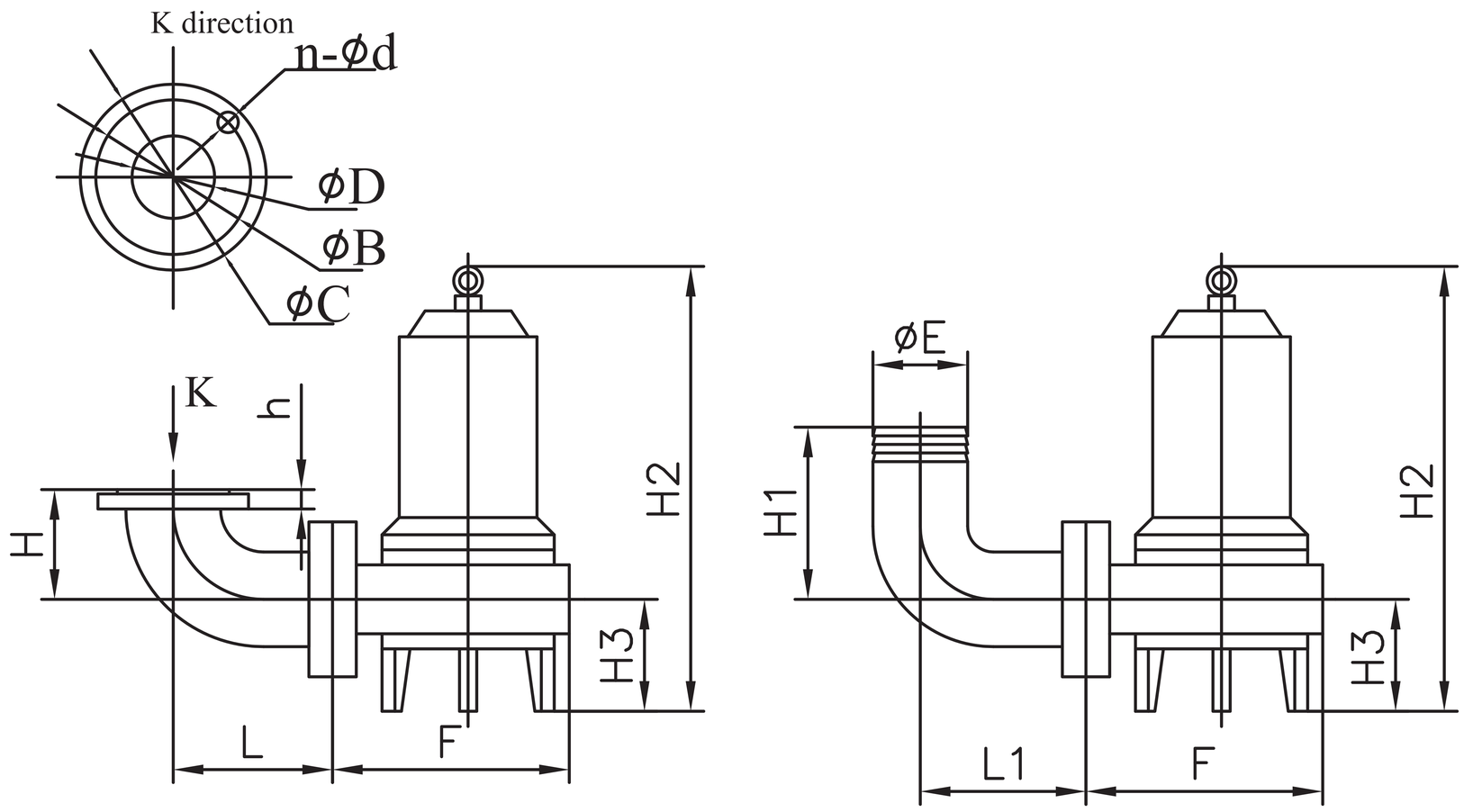

sp

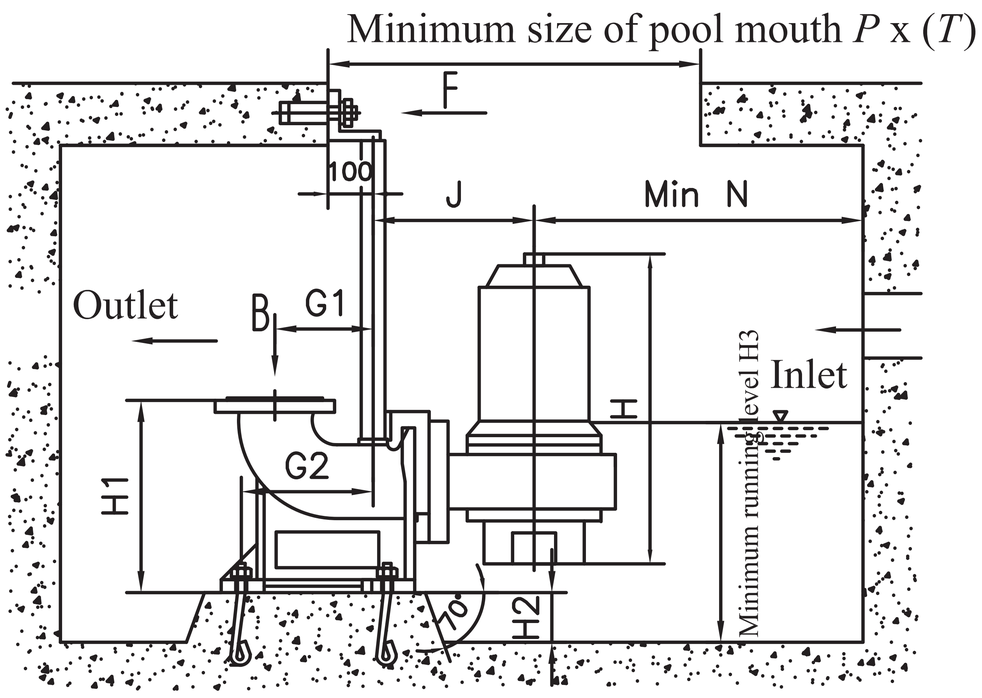

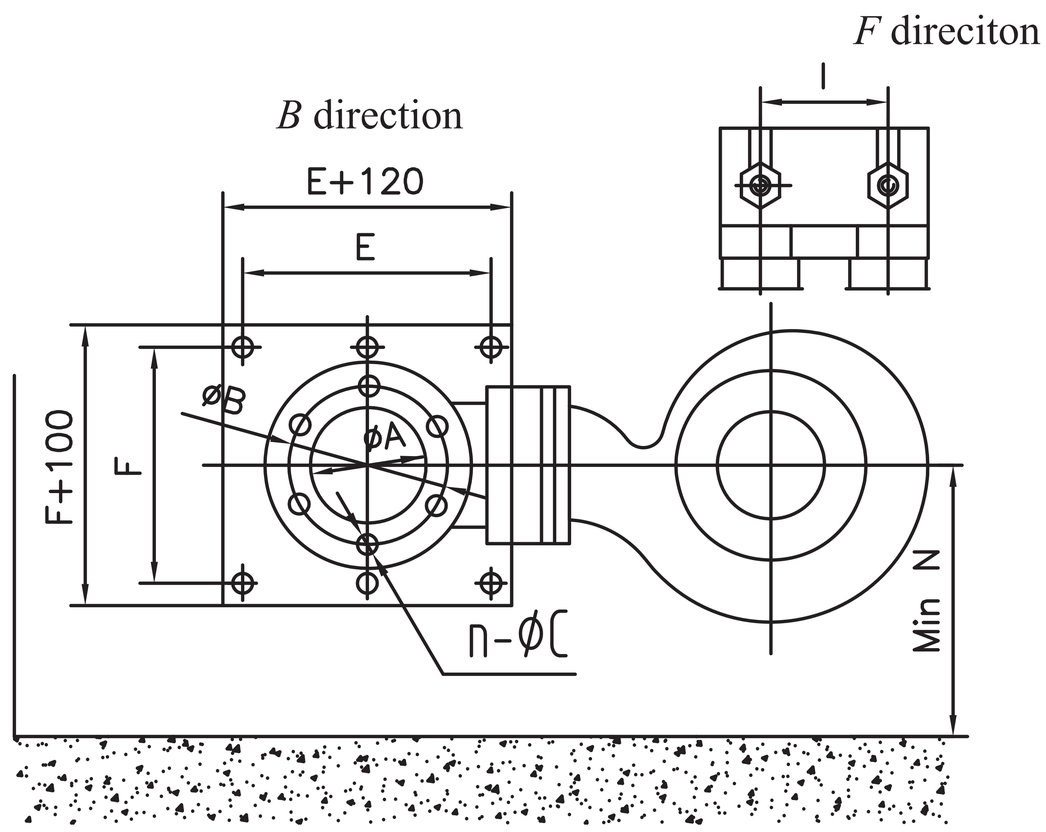

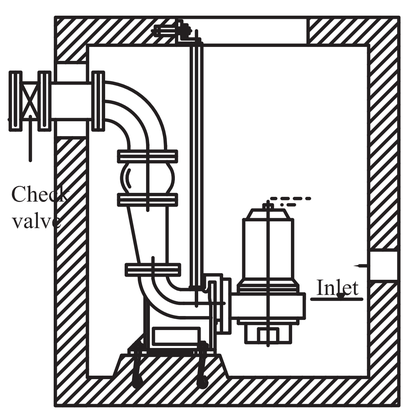

Self-coupled wet installation

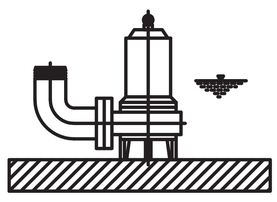

Movable wet-type installation

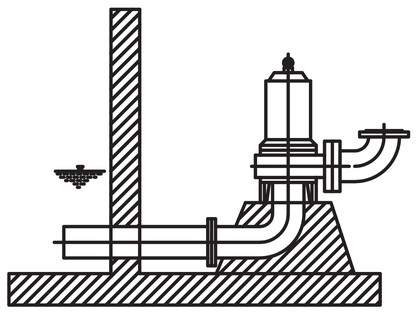

Vertical dry-type installation

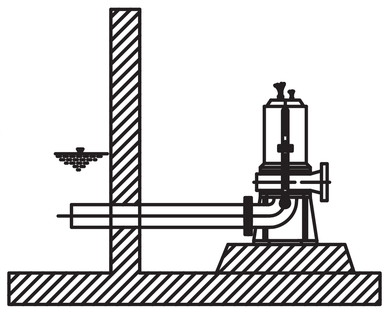

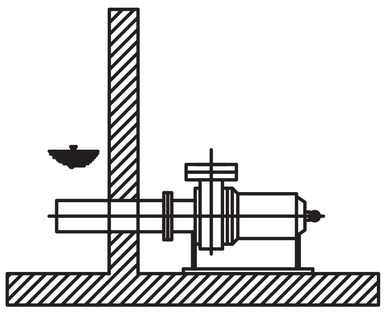

Horizontal dry-type installation

Installation Modes

WGS Series submersible sewage pump can be installed through auto-coupling installation (Z), fixed base installation (P), fixed base installation (F), mobile hose installation (R) and mobile pipe installation(Y). All above-mentioned installation modes are simple, and they will be introduced respectively as below.

Automatic Coupling Installation (Z)

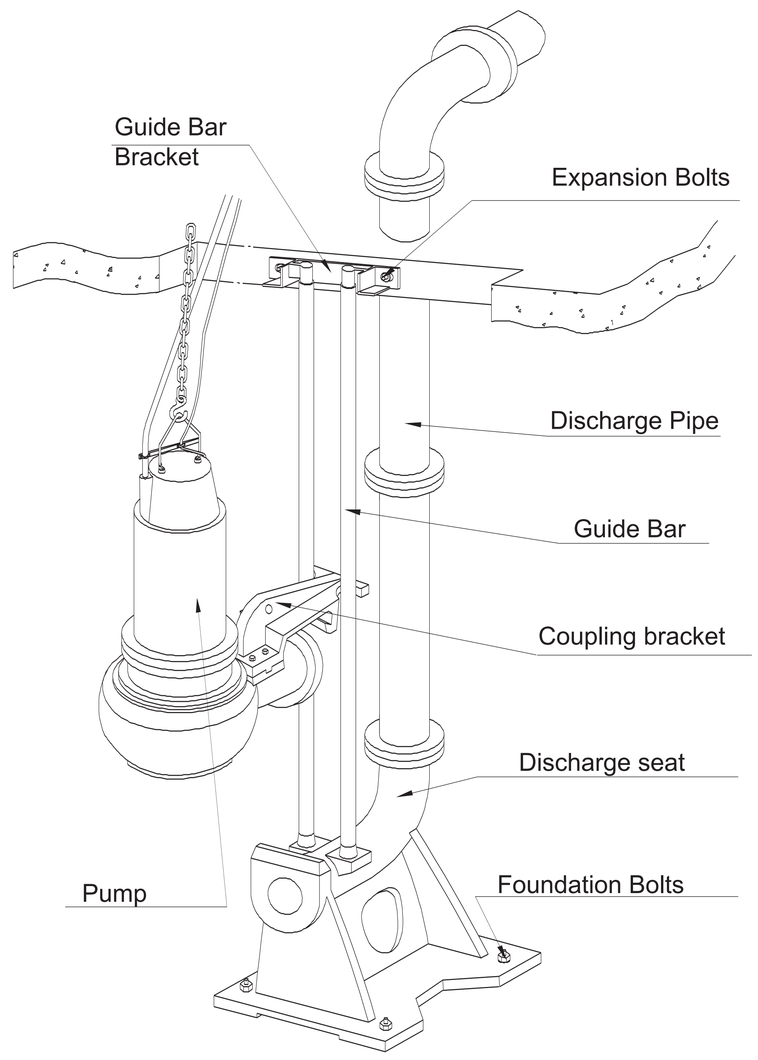

Automatic coupling installation actually coupling device to connect pump and pipeline.With the coupling device, the pump and the outlet line is independent of each other, without the need for conventional fasteners connection, so pump and outlet line connection and disconnection is very easy.Coupling device is very simple in fact, only out of the water pipe seat, guide rod, guide rod frame, coupling the four things, guide rod only play a guiding role, do not force, with ordinary water pipe or steel pipe can be, users can be self-provided, and can be very convenient according to the depth of the pool cut into the required length.When installation, the outlet pipe, guide rod, guide frame installed, the coupling loaded on the pump body, lift pump, wear the coupling frame of semicircle orifice into the guide rod and the pump to slide along the guide bar, coupling will put the pump body and outlet pipe fasten, at the same time, the pump body outlet and outlet pipe entrance automatic alignment, automatic tiejin flange end face.When you need to repair the pump, just put the pump up, the pump body and the outlet pipe seat off.This way of installation, really save worry, effort, trouble.
Since the coupling device and the pump are relatively independent, you can still use the original coupling device if your pump station needs to change to the same caliber pump with low head or high head due to the change of circumstances

Fixed Base Installation (P)

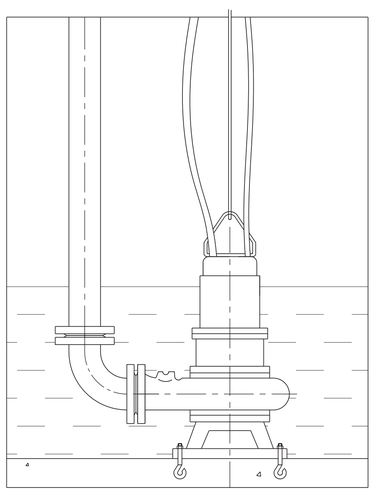

P

·Fixed Base Installation (F)

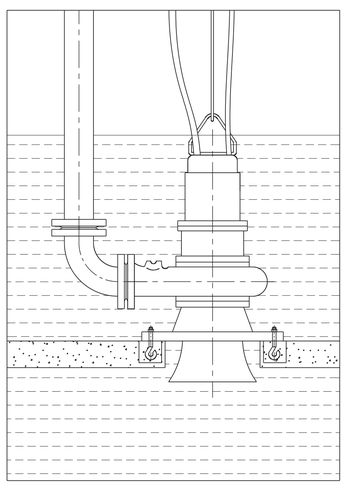

F

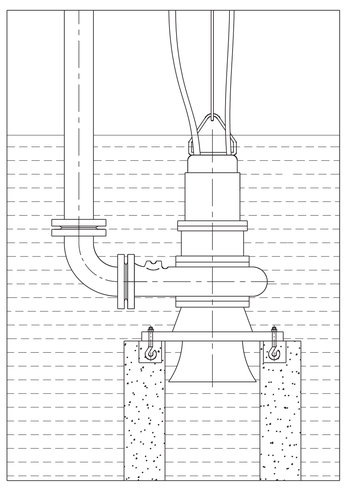

F

Fix the supporting base on the foundation and connect the outlet pipe to operate.The base needs to be bolted.

Supply scope / Installation type / Supply Model			Submersible installation mode				
			Auto-coupling Installation Z	Fixed base Installation P	Mobile hose Installation R	Mobile pipe Installation Y	Single Pump
Complete package	Pump (10m Cable)		✔	✔	✔	✔	✔
	Auo-coupling	DQC	✔				
		Bracket	✔				
		Fixed plate	✔				
	Base			✔	✔	✔	
	Elbow+Connector					✔	
	Hose+Connector				✔		
Necessary	Guide Bar		✔				
	Expansion Blot		✔				
	Anchor Bolt		✔	✔			
Choose and buy parts	Elbow+Connector			✔			
	Hose+Connector			✔			
	SS Lifting Chain		✔	✔	✔	✔	✔
	Carbon Lifting Chain		✔	✔	✔	✔	✔
	Taper Pipe		✔	✔		✔	✔
	Match Flange		✔	✔		✔	✔
Spare Parts	Impeller		✔	✔	✔	✔	✔
	Pump Cover		✔	✔	✔	✔	✔
	Bearing		✔	✔	✔	✔	✔
	Mechanical Seal		✔	✔	✔	✔	✔
	O-ring		✔	✔	✔	✔	✔
	Wear Ring		✔	✔	✔	✔	✔

Wings
PUMPS

CERTIFIED
ISO 9001
ISO 14001
ISO 45001
ISO 50001

BUREAU VERITAS

37/1 Soi Tiwanon 48, Tiwanon Rd.,
T.Thasai, A.Muang, Nonthaburi 11000
Tel: +66 2 580 8011 - 4
www.wgflow.com

W&G
Wiroon & Gwyness