Wings PUMPS

Submersible Propeller Gate Pump

New-generation mechanical/electrical axial flow electric submersible propeller gate pumps from ***Wings Pumps*** provides high reliability, reduced installation and maintenance costs, with a longer lifetime.

37/1 Soi Tiwanon 48, Tiwanon Rd.,
T.Thasai, A.Muang, Nonthaburi 11000
Tel: +66 2 580 8011 - 4
www.wgflow.com
Wiroon & Gwyness

APPLICATIONS

Storm Water Drainage

Supports structures, channels and pipes that carry stormwater (rain water) to ponds, lakes, streams and rivers.

Irrigation and Aquaculture

Used for irrigation and aquaculture ecosystems. Environmentally-friendly.

Raw Water and Processed Water

Supports raw water intakes and applicable intakes for water treatment plants.

Sewage and Recirculation Sludge

Designed to move the thickest mixtures and pass large pieces of debris without damage or wear on the pump.

Municipality

Well-Integrated with municipality work and projects with high requirements.

Renewable Energy

can be used with solar cells for sustainable energy with smart device that properly manage the process and prevent pump damage.

KEY BENEFITS

Better Power Consumption

Save more power with Premium Efficiency Motors.

Stability and Reliability

Wings Pumps' advanced engineering provides better stability and reliability.

Wide Range of Operations

Wings Pumps are more versatile and can be used in a wide variety of operations.

High Flexibility in Installations

Wings Pumps can be installed perfectly in various situations and setups.

Flexibility in Material

Customize pumps with various material and composites to better suit your operations.

Internet of things

Through the cloud network system, the system organizes data and keeps tabs on the pump's operational state. User can be real-time observation possible.

FEATURES AND BENEFITS

Our new-generation mechanical/electrical axial flow electric ***submersible propeller gate pumps*** pumps from ***Wings Pumps*** provides high reliability, reduced installation and maintenance costs, with a longer lifetime.

With ***single-piece casting*** of propellers and other components, Wings Pumps provide superior dynamic balance with extremely strong and stable operations.

Our ***Premium Efficiency Motors*** are manufactured according to IE 60034-30 IE3 standards, providing improved efficiency, reduced energy consumption with less impact on the environment.

Wings Pumps are engineered and designed with ***Computational Fluid Dynamics*** (CFD) combined with predictive AI and powerful graphics for visualizations and simulations to foresee any multi-dimensional problems.

Our ***self-cleaning propeller*** blade design decreases clogging and minimizes risks caused by liquids containing fibrous material or sludge.

A slim design offers easy installation, low vibration and low Net Positive Suction Head (NPSH)

Smart technology, highly intelligent controls with 8 points of sensor monitoring devices with optional AI and IoT expansions.

Our special Coating offers higher resistance to abrasive and corrosive effects

ISO 9001 & ISO14001 & ISO45001 certified. With ISO certification, Wings Pumps provides reliability with a high standard giving you assurance and peace of mind.

able to operate at a high performance for longer than 12 hours.

SUBMERSIBLE CROSS-FLOW PUMP

1. Insulated Motor - for better reliability

All motors are fully submersible to a depth of at least 20 meters.

2. Unique seals provide extra safety

Our mechanical seal systems minimize shaft overhang while maximizing cooling and lubrication.

3. Sensors

Thermal sensors help prevent overheating. Leakage sensors alarms you of liquid intrusion through cables or seals.

4. Reliable and Efficient Hydraulics

Wings Pumps technology ensures maximum reliability and high efficiency.

5. Flexible Installation

Wings are designed according to the requirements of customer and suitability according to the actual situation

6. Spare Parts

All models will have stock spare parts for at least five years,
and WINGS' skilled staff will help you find the right part and give you advice on spare parts.

PREMIUM EFFICIENCY MOTORS (IE3) IN ACCORDANCE WITH IEC60034-30,IEC60529

Class F Insulation (Up to 155°C/311°F)

Temperature rise according to IEC / NEMA Class A

Class H Insulation (Up to 180°C/356°F)

Temperature rise according to IEC / NEMA Class A

International Protection Standard IP68

International Protection Standard according to IEC 60529/DIN 40050

Better Savings on Power Consumption

Our highly efficient motors provide more savings with lower power consumption.

Better for the Environment

Our pumps are designed to be more more environmentally-friendly and have minimal impact on any ecosystem.

DOUBLE MECHANICAL SEAL

Double mechanical seals are designed to ensure maximum sealing safety. These seals virtually eliminate leakage of the fluid being handled in pumps. Made by SiC, Carbon, Cement Carbide and special requires.

SMART PROTECTION TECHNOLOGY WITH SENSOR MONITORING

Winding Temperature measurement component

For stator coil over-Temperature protection with PT100 in Phase A, Phase B and Phase C

Water leakage float switch in Junction box

When the junction box leaks, the float switch state will switch and the resistance R is approximately equal to 0

Water leakage float switch in motor

In case of leakage in motor cavity, the float switch state will switch and the resistance R is approximately equal to 0

Water leakage electrode in Oil chamber

When water enters oil and reaches 10%, The resistance of oil and water mixed liquor will be less than 33kΩ

Bearing Temperature sensor in forward direction

The manifold block temperature measurement component PT100 send out directly proportional milliampere-level electric quantity signal

Vibration monitoring sensor

Sensors that monitor the level of vibration

Moisture Detector in Stator Housing (Optional)

Detects levels of moisture

Designed and Engineered for Optimum Efficiency and Reliability with CFD

Wings is proud to be both designer, engineer and provider of water solutions. This is what gives us the ability to cooperate closely with the client and deliver results that fit their requirements, demands and needs. Besides engineering for our own projects, we can also offer design and engineering services to third parties. This way we are able to help all side involved to further develop water solutions that benefit businesses and the community.

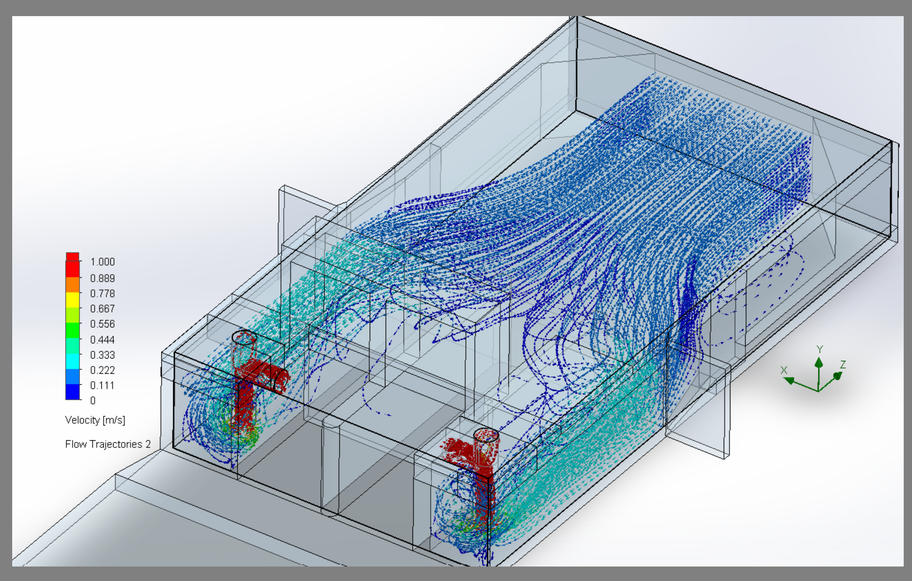

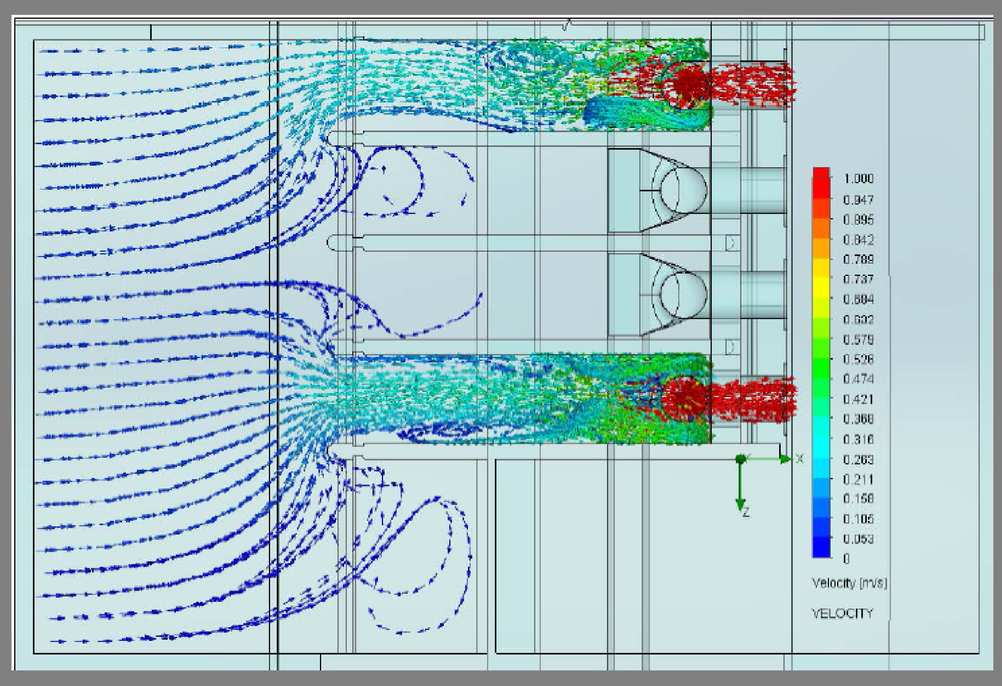

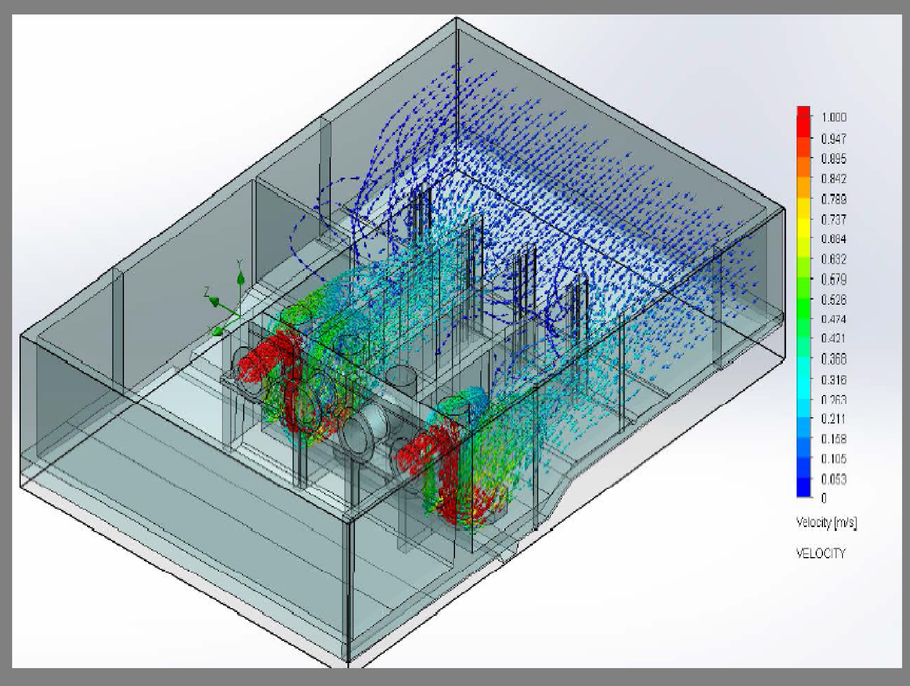

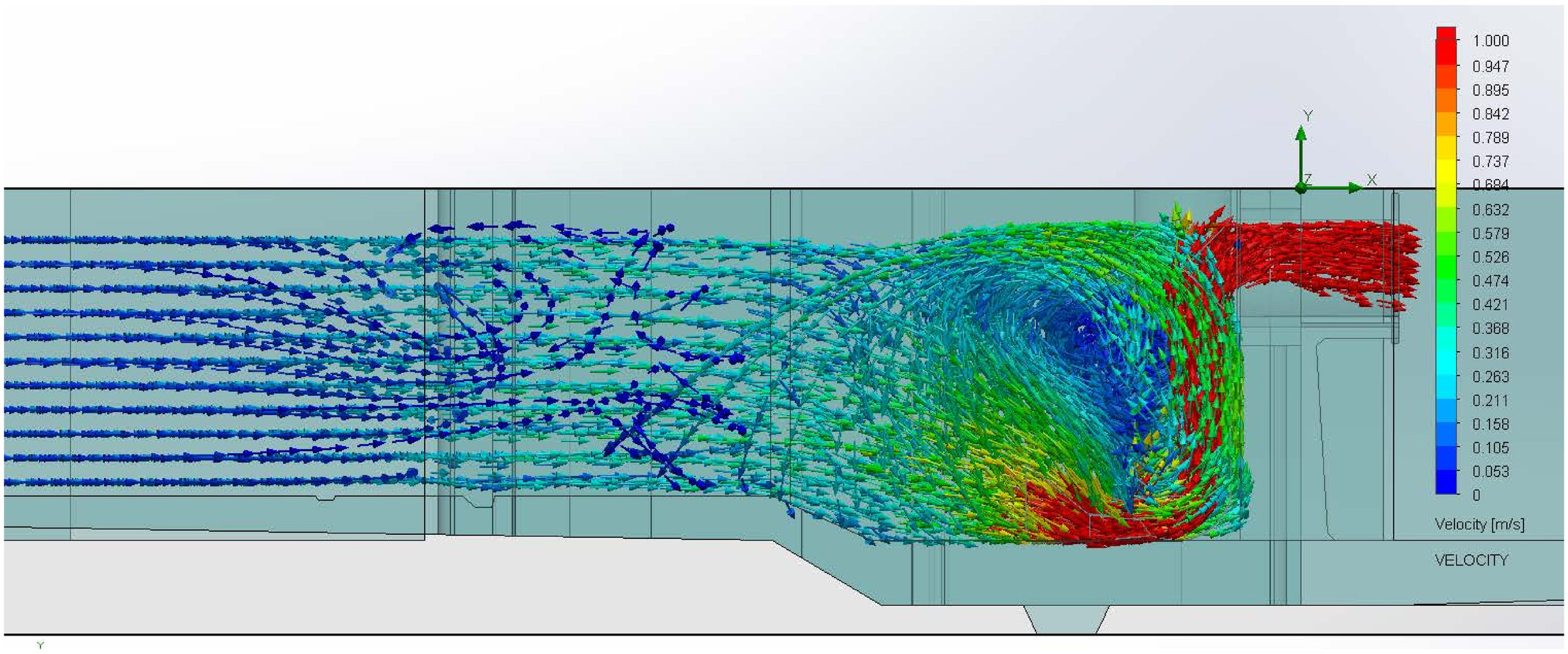

37/1 Soi Tiwanon 48, Tiwanon Rd.,
T.Thasai, A.Muang, Nonthaburi 11000
Tel: +66 2 580 8011 - 4
www.wgflow.com
Wiroon & Gwyness

PRODUCT MODEL INSTRCTION

800 WGGP 125 140

- 140 — Rated power (kW)
- 125 — Specific revolutions of pump
- WGGP — Submersible propeller gate pump
- 800 — Outlet dimeter (mm)

DIMENSION

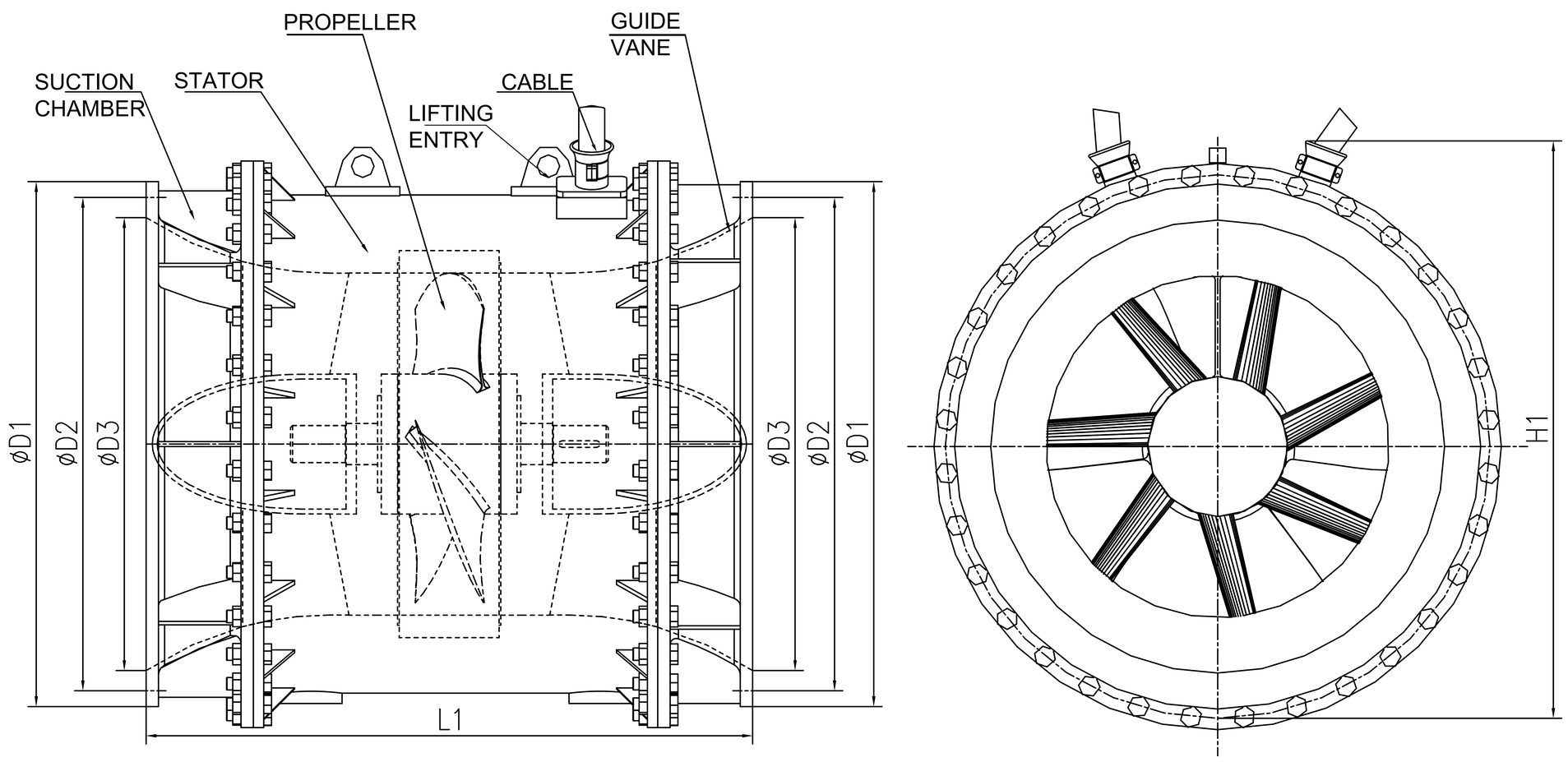

GATE PUMP MODEL	D1	D2	D3	L1	H1
300WGGP (Series)	535	495	400	1000	635
500WGGP (Series)	755	705	600	1050	875
600WGGP (Series)	860	810	700	1100	1010
700WGGP (Series)	1075	1020	900	1130	1225
800WGGP (Series)	1275	1220	1100	1200	1455
900WGGP (Series)	1375	1320	1200	1400	1575
1000WGGP (Series)	1575	1520	1400	1600	1795
1200WGGP (Series)	1785	1785	1600	1800	2025
1400WGGP (Series)	1985	1930	1800	2000	2235
2000WGGP (Series)	2200	2130	2000	2600	2235
2200WGGP (Series)	2410	2340	2200	3050	2455
2400WGGP (Series)	2610	2540	2400	3500	2740
2600WGGP (Series)	2810	2740	2600	4000	3260

37/1 Soi Tiwanon 48, Tiwanon Rd.,
T.Thasai, A.Muang, Nonthaburi 11000
Tel: +66 2 580 8011 - 4
www.wgflow.com
Wiroon & Gwyness

OVERVIEW RANGE

Model Pump	Desing Point Operating						
	Flow (Q)		Head H	Power	Speed	Efficiency	Diameter
	M³/h	l/s	(m.)	(kW)	(r/min)	(η)	(mm)
350WGGP -50	1177	327	9.08	45	1450	80.6	300
350WGGP -50J	803	223	4.08	15	980	80.6	300
350WGGP -70	954	265	5.99	30	1450	80.1	300
350WGGP -70J	641	178	2.8	11	980	80.1	300
350WGGP -70*	1328	369	7.79	45	1450	82.7	300
350WGGP -70*J	911	253	3.49	15	980	82.4	300
350WGGP -85	1116	310	5.41	37	1450	80.4	300
350WGGP -85J	742	206	2.6	11	980	80.4	300
350WGGP -100	1170	325	4.39	30	1450	84.6	300
350WGGP -100J	767	213	2.22	11	980	84.6	300
350WGGP -125	1260	350	3.6	30	1540	80.4	300
350WGGP -125J	828	230	1.8	7.5	980	80.4	300
350WGGP -160	1264	351	2.68	18.5	1450	78.4	300
350WGGP -160J	860	239	1.18	7.5	980	78.4	300
500WGGP -50	2728	758	9.02	110	980	81.7	450
500WGGP -50J	2012	559	5.1	45	730	81.7	450
500WGGP -70	2160	600	6.30	55	980	81.2	450
500WGGP -70J	1610	447	5.56	30	730	80.1	450
500WGGP -70*	3020	839	8.08	110	980	83.62	450
500WGGP -70*J	228	616	4.59	45	730	83.55	450
500WGGP -85	2520	700	5.78	65	980	81.5	450
500WGGP -85J	1816	517	3.27	30	730	81.5	450
500WGGP -100	2686	746	4.43	55	980	85.4	450
500WGGP -100J	1973	548	2.59	30	730	85.4	450
500WGGP -125	2855	793	3.8	55	980	81.5	450
500WGGP -125J	2128	591	2.1	22	730	81.5	450
500WGGP -160	2930	814	2.52	45	980	79.6	450
500WGGP -160J	2160	600	1.48	15	730	79.6	450
600WGGP-50	3884	1079	7.66	110	730	82.2	550
600WGGP-70	3056	849	4.74	65	730	81.5	550
600WGGP-70*	4144	1151	6.58	110	730	84.03	550
600WGGP-85	3449	958	4.71	80	730	82	550
600WGGP-100	3640	1011	3.72	65	730	85.9	550
600WGGP-125	3859	1072	3.21	65	730	82	550
600WGGP-160	3938	1094	2.21	45	730	80.2	550
700WGGP -50	6163	1712	10.3	250	730	82.5	650
700WGGP -50J	4957	1377	6.79	132	590	82.5	650
700WGGP -70	4799	1333	7.41	155	730	81.89	650
700WGGP -70J	4172	1159	4.09	80	590	81.9	650
700WGGP -70*	6790	1886	9.31	250	730	84.43	650
700WGGP -70*J	5504	1529	6.05	132	590	84.44	650
700WGGP -85	5688	1580	6.56	155	730	82.4	650
700WGGP -85J	4640	1289	4.15	110	590	82.4	650
700WGGP -100	5926	1646	5.44	155	730	86.2	650
700WGGP -100J	4824	1340	3.47	80	590	86.1	650
700WGGP -125	6570	1825	4.06	132	730	82.4	650
700WGGP -125J	5260	1461	2.73	80	590	82.4	650
700WGGP -160	6544	1818	3	95	730	80.7	650
700WGGP -160J	5292	1470	1.96	65	590	80.6	650
800WGGP -50	7315	2032	9.76	280	590	82.9	750
800WGGP -50J	6170	1714	6.55	155	490	82.9	750
800WGGP -70	6318	1755	5.64	155	590	82.3	750
800WGGP -70J	5029	1397	430	95	490	82.3	750
800WGGP -70*	8428	2941	8.11	280	590	84.63	750
800WGGP -70*J	6944	1929	5.68	455	490	84.6	750

37/1 Soi Tiwanon 48, Tiwanon Rd.,
T.Thasai, A.Muang, Nonthaburi 11000
Tel: +66 2 580 8011 - 4
www.wgflow.com
Wiroon & Gwyness

Model Pump	Desing Point Operating						
	Flow (Q)		Head H	Power	Speed	Efficiency	Diameter
	M³/h	l/s	(m.)	(kW)	(r/min)	(η)	(mm)
800WGGP -85	7117	1977	5.56	180	590	82.7	750
800WGGP -85J	5915	1643	3.83	110	490	82.7	750
800WGGP -100	7466	2074	4.5	155	590	86.4	750
800WGGP -100J	6228	1730	3.05	90	490	86.4	750
800WGGP -125	7985	2218	3.77	155	590	82.7	750
800WGGP -125J	6620	1839	2.62	90	490	82.7	750
800WGGP -160	8093	2248	2.67	110	590	80.9	750
800WGGP -160J	6671	1859	1.9	65	490	80.9	750
900WGGP -50	8921	2478	8.52	310	490	83.2	850
900WGGP -70	7398	2055	5.16	180	490	82.5	850
900WGGP -70*	10080	2800	7.04	280	490	84.93	850
900WGGP -85	8478	2355	4.89	200	490	83	850
900WGGP -100	9036	2510	3.75	155	490	86.6	850
900WGGP -100T	10775	2993	5.95	310	590	86.6	850
900WGGP -125	9695	2693	3.12	155	490	83	850
900WGGP -160	9562	2656	245	110	490	81.2	850
1000WGGP -50	9608	2669	8.85	315	490	83.2	870
1000WGGP -50T	11790	3275	12.39	560	590	83.2	870
1000WGGP -70	7999	2222	5.55	180	490	82.6	870
1000WGGP -70T	9961	2767	7.4	315	590	82.8	870
1000WGGP -70*	10894	3026	7.57	315	490	84.92	870
1000WGGP -85	9360	2600	4.92	210	490	83	870
1000WGGP -85J	11174	3104	7.34	330	590	83	870
1000WGGP -100	9684	2690	4.17	180	490	86.7	870
1000WGGP -100J	11700	3250	5.97	280	590	86.7	870
1000WGGP -125	10343	2873	3.51	155	490	83	870
1000WGGP -125J	12449	3458	510	280	590	83	870
1000WGGP -160	10429	2897	2.55	132	490	81.3	870
1000WGGP -160J	12568	3491	3.68	210	590	81.3	870
1200WGGP -50	14447	4013	11.92	710	490	83.5	1000
1200WGGP -70	12550	3486	6.77	355	490	82.9	1000
1200WGGP -70*	16452	4570	10.09	630	490	85.19	1000
1200WGGP -85	14242	3956	645	375	490	83.3	1000
1200WGGP -100	14681	4078	5.54	330	490	86.9	1000
1200WGGP -125	15595	4332	4.73	330	490	83.3	1000
1200WGGP -160	16009	4447	3.2	250	490	81.6	1000
1400WGGP -50	19066	5296	9.09	630	365	83.9	1200
1400WGGP -50J	15548	4319	5.83	355	295	83.9	1200
1400WGGP -70	16628	4619	4.97	355	365	83.3	1200
1400WGGP -70J	13277	3688	3.37	210	295	83.5	1200
1400WGGP -70*	21308	5919	7.97	630	365	85.52	1200
1400WGGP -70*J	17384	4829	5.12	330	295	85.54	1200
1400WGGP -85	18277	5077	5.21	400	365	83.7	1200
1400WGGP -85J	14645	4068	3.5	225	295	83.7	1200
1400WGGP -100	19364	5349	4.13	355	365	87.2	1200
1400WGGP -100A	16927	4702	3.81	280	365	87.1	1200
1400WGGP -100B	21103	5862	4.52	400	365	87.3	1200
1400WGGP -125	20858	5794	3.34	315	365	83.7	1200
1400WGGP -125J	16783	4662	2.21	180	295	83.7	1200
1400WGGP -160	20660	5739	2.52	250	365	82.1	1200
1400WGGP -160J	16646	4624	1.68	132	295	82.1	1200
1800WGGP - 50	32065	8907	10.07	1300	295	84.4	1540
1800WGGP - 70	26654	7404	6.33	710	295	83.8	1540
1800WGGP - 85	30899	8583	5.81	800	295	84.2	1540
1800WGGP - 100	32224	8951	4.79	710	295	87.6	1540
1800WGGP -125	34146	9485	4.13	630	295	84.2	1540

37/1 Soi Tiwanon 48, Tiwanon Rd.,
T.Thasai, A.Muang, Nonthaburi 11000
Tel: +66 2 580 8011 - 4
www.wgflow.com
Wiroon & Gwyness

Model Pump	Desing Point Operating						
	Flow (Q)		Head H	Power	Speed	Efficiency	Diameter
	M^3/h	l/s	(m.)	(kW)	(r/min)	(η)	(mm)
2000WGGP -50	37372	10981	8.62	1300	240	84.6	1740
2000WGGP -70	31194	8665	5.38	800	240	84.2	1740
2000WGGP -85	35644	9901	5.17	900	240	84.5	1740
2000WGGP -100	37919	10533	4.01	710	240	87.8	1740
2000WGGP -125	41562	11545	3.09	630	240	84.5	1740
2100WGGP -50	37955	10543	7.25	1050	205	84.7	1850
2100WGGP -70	33300	9250	4.04	710	205	84.3	1850
2100WGGP -85	36641	10178	4.23	710	205	84.6	1850
2100WGGP -100	37836	10510	3.63	630	205	87.9	1850
2100WGGP -125	42847	11902	2.52	630	205	84.6	1850
2200WGGP -50	46094	12804	7.36	1300	194	84.8	2000
2200WGGP -70	39816	11060	4.22	900	194	84.5	2000
2200WGGP -85	43384	12051	4.58	900	194	84.8	2000
2200WGGP -100	45810	12725	3.64	800	194	88	2000
2200WGGP -125	49378	13716	2.97	710	194	84.7	2000
2500WGGP -50	64289	17858	8.57	2000	180	85.1	2300
2500WGGP -70	53248	14791	5.47	1300	180	84.8	2300
2500WGGP -85	61931	17203	5.03	1400	180	85	2300
2500WGGP -85J	50828	14119	3.2	800	146	85	2300
2500WGGP -100	65448	18180	3.99	1300	180	88.2	2300
2500WGGP -125	70553	19598	3.26	1120	180	85	2300

SECTION DRAWING

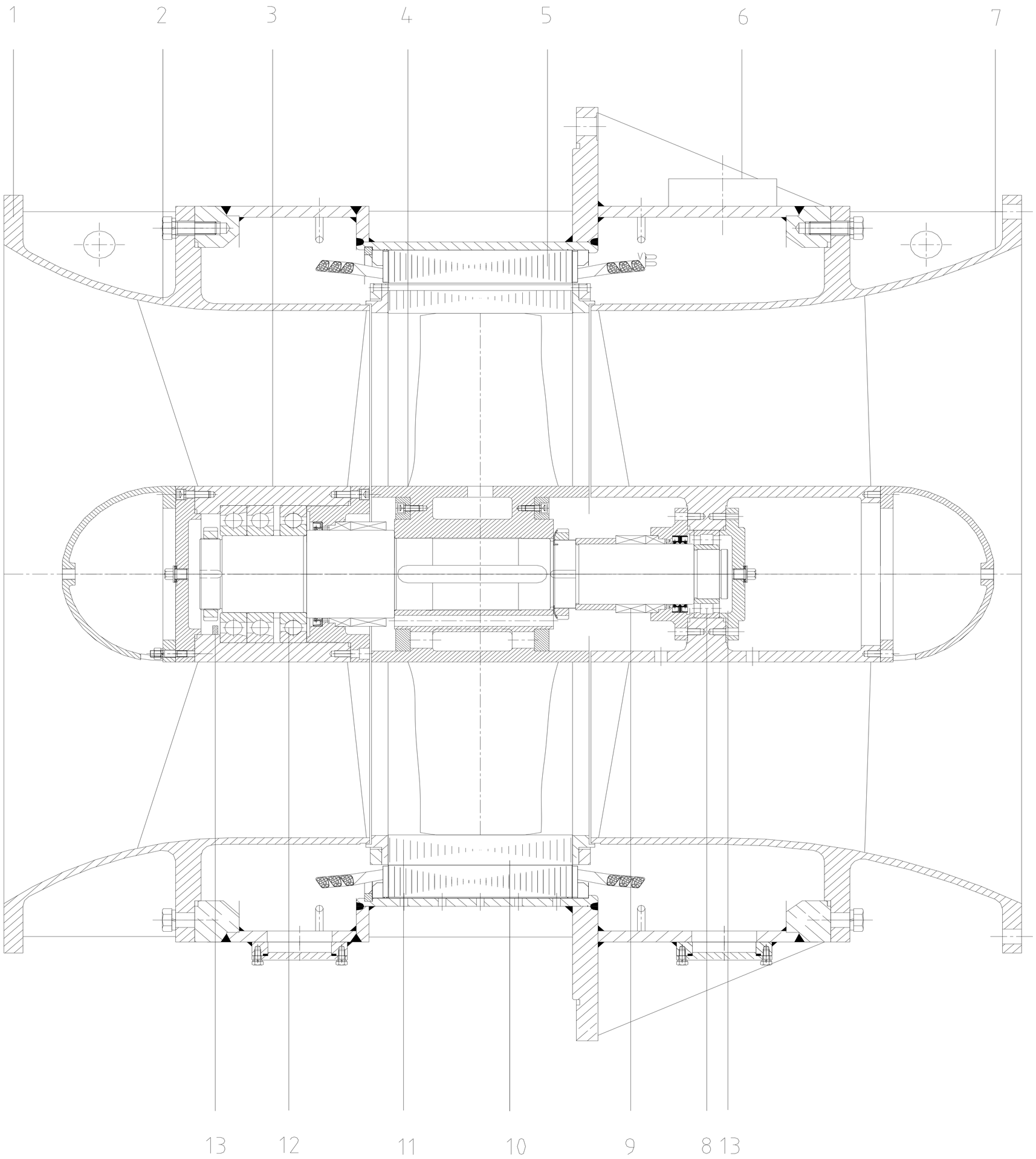

No.	Description	Qty	Material	ASTM/AISI/JIS
1	Inlet bell mouth	1	Cast iron	FC250/SS400
2	Pump Housing	1	Cast iron	FC250/SS400
3	Bearing house	1	Cast iron	FC250/SS400
4	Impeller	1	Stainless steel	SUS304
5	Stator	1	Copper	-
6	Cable outlet	1	Carbon steel	SS400
7	Outlet and Diffuser	1	Cast iron	FC250/SS400
8	Support bearing	1	SKF/FAG/Local	-
9	Mech. Seal	1	SIC/SIC	-
10	Shaft	1	Stainless steel	SUS420
11	Rotor	1	Copper	-
12	Main bearing	1	SKF/FAG/Local	-
13	Bearing temp. Sensor	1	PT100	-

37/1 Soi Tiwanon 48, Tiwanon Rd.,
T.Thasai, A.Muang, Nonthaburi 11000
Tel: +66 2 580 8011 - 4
www.wgflow.com
Wiroon & Gwyness

INSTALLATION

Structure Installation for Electric Submersible Gate Pumps

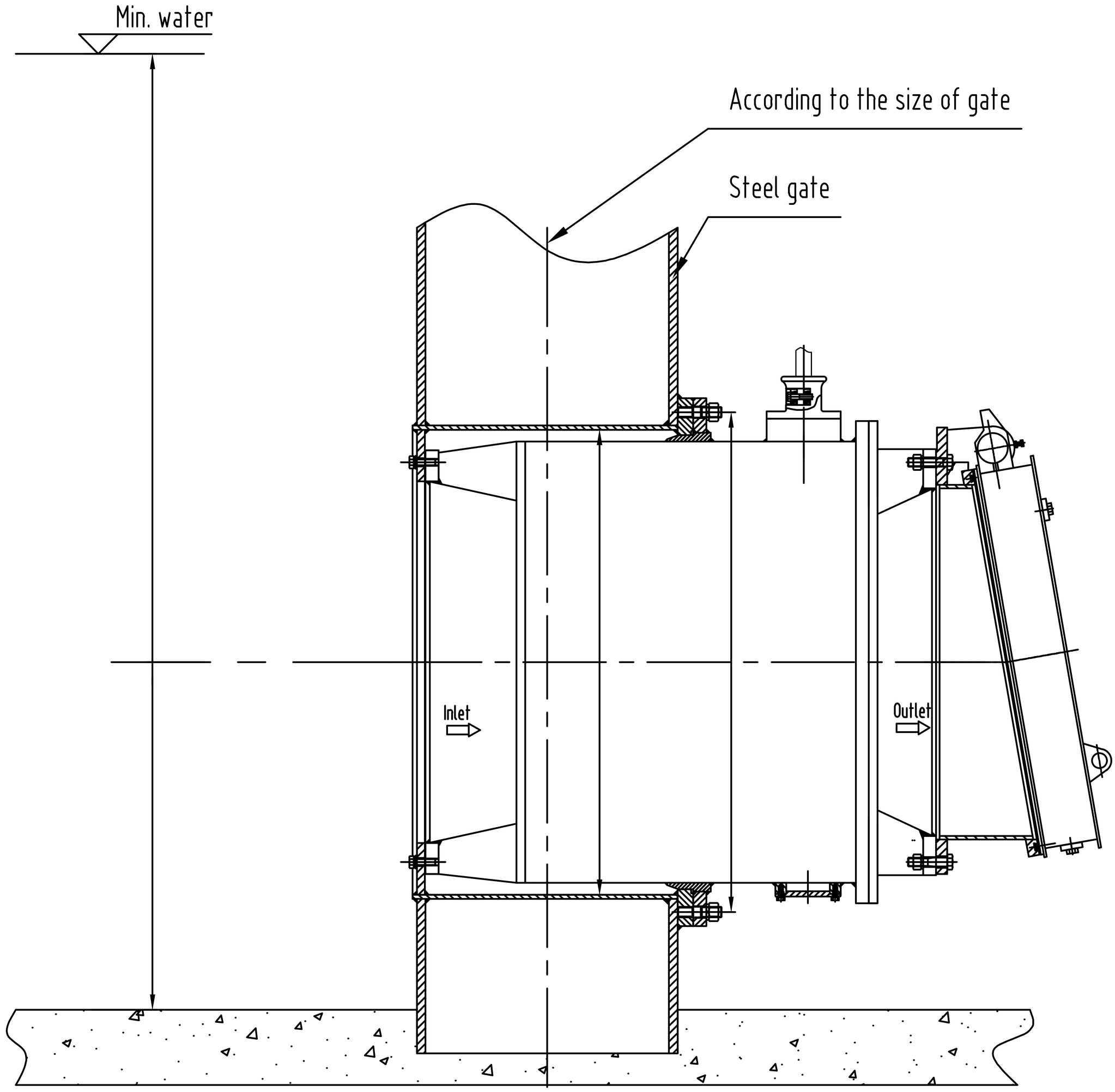

CONSTRUCTION

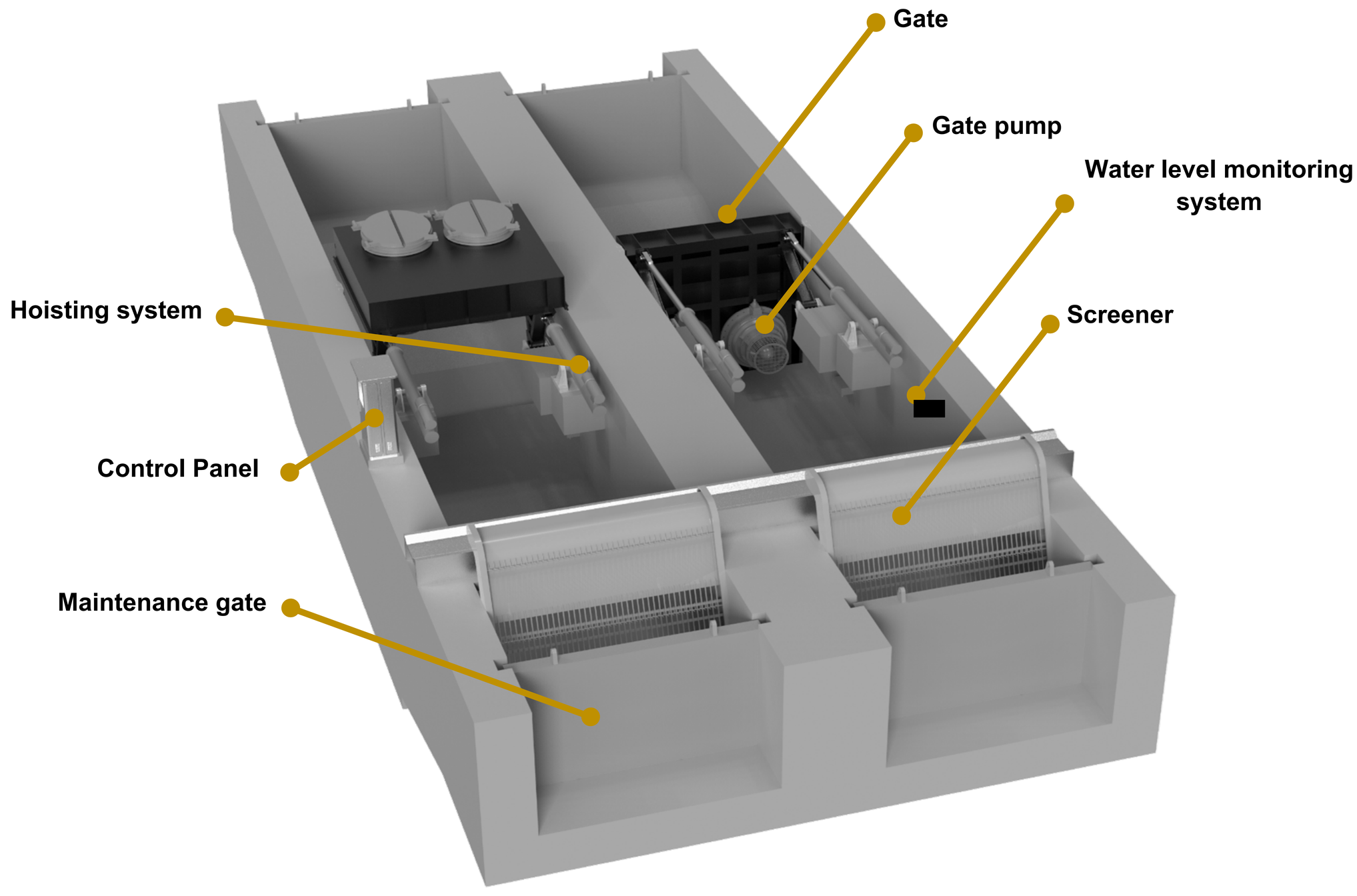

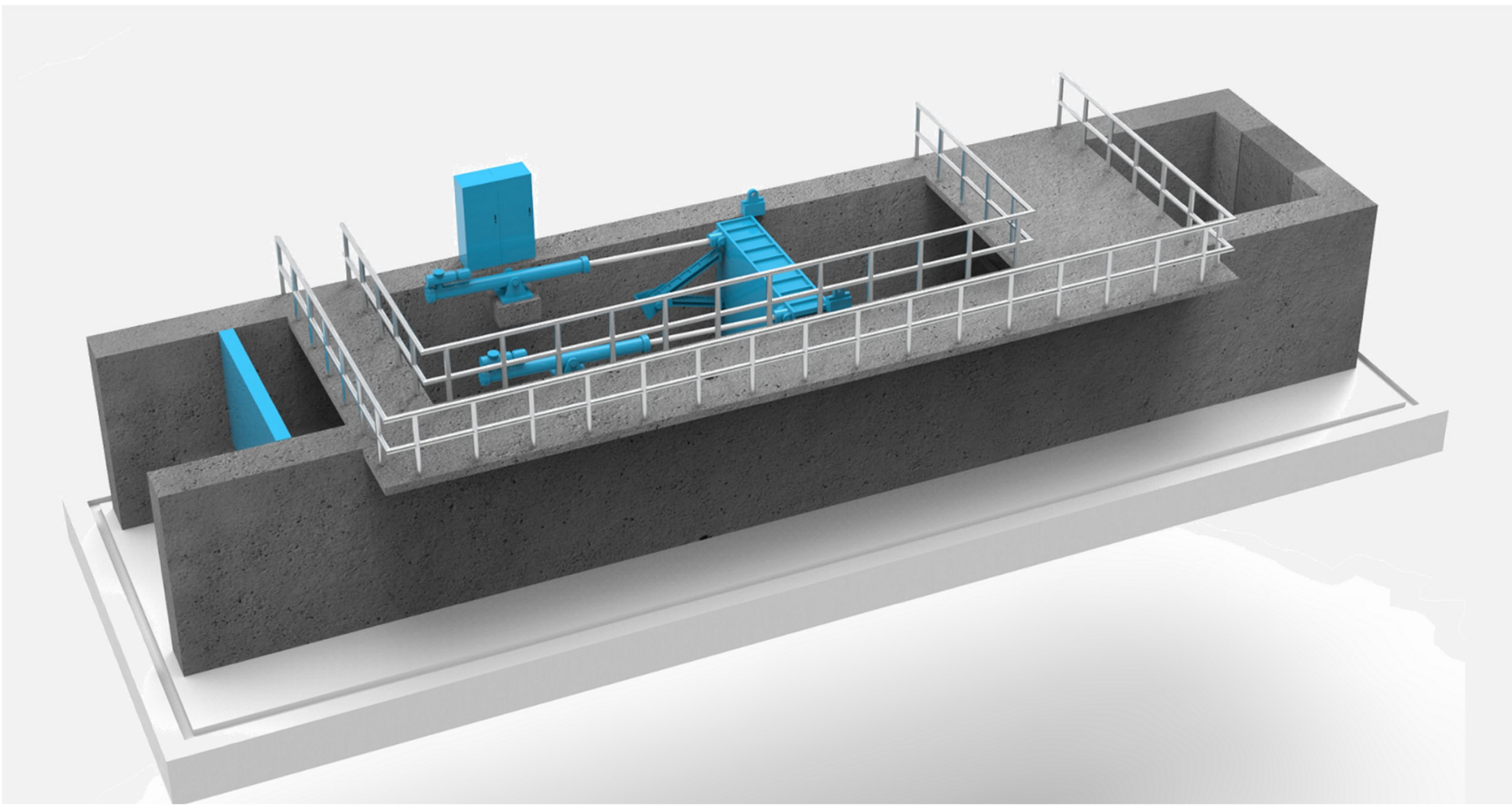

INSTALLATION TYPES

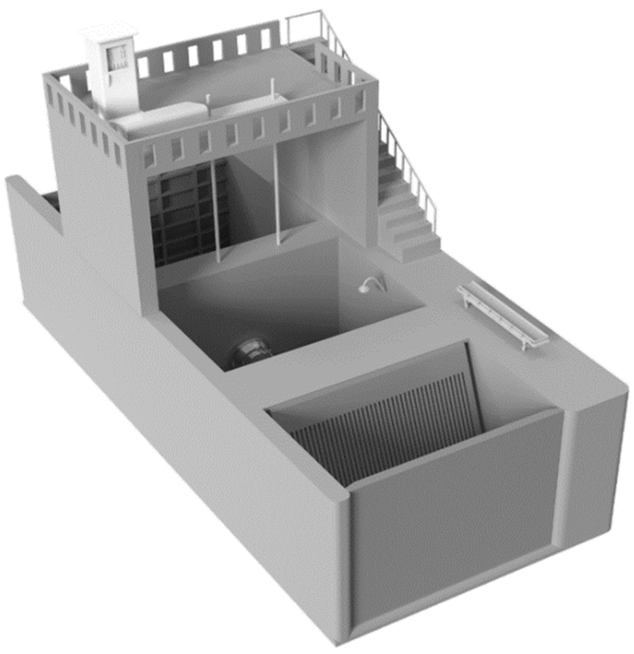

Gate hoisted vertically by hoist system

- **Advantages**

  High hoisting capacity.Less embedded .....

  Small footprint

  Low cost

- **Disadvantages**

  Civil construction for hoist is required.

  Landscape not good enough.

Gate hoisted vertically by hydraulic system

- **Advantages**

  Faster lifting speed and stable structure.

  Small footprint and compact design.

  Easy maintenance.

- **Disadvantages**

  High requirement of civil work and water proof

  Landscape not as good as flip type

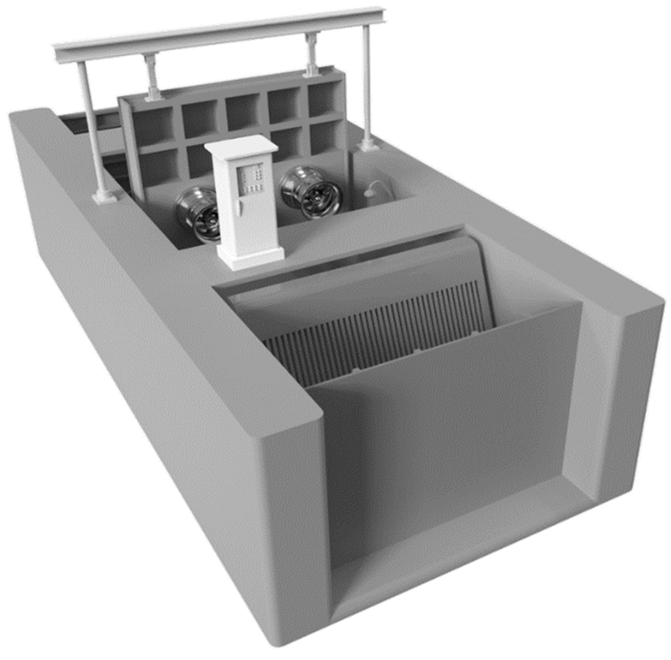

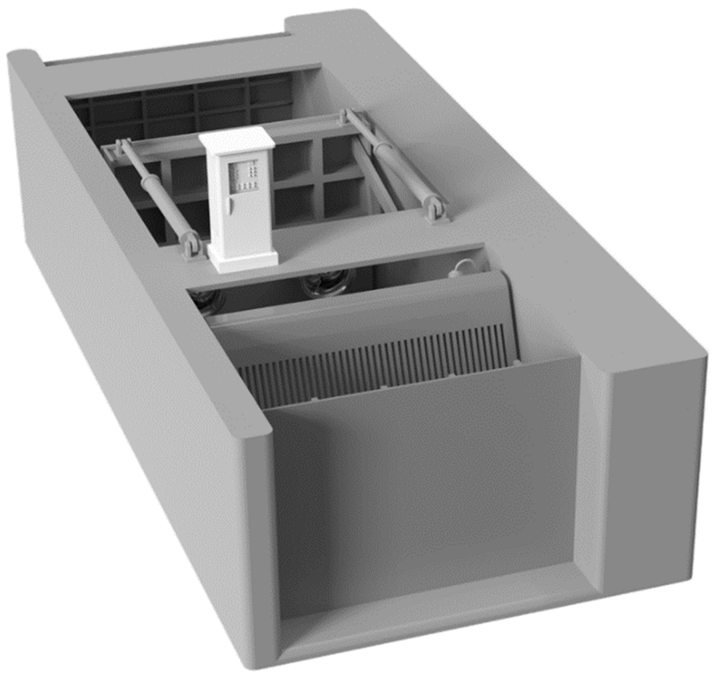

Gate flipped vertically by hydraulic system

- **Advantages**

  Faster lifting speed and stable structure.

  Less part above land and good landscape.

  Easy maintenance.

- **Disadvantages**

  Longer than other types. Bigger footprint.

Gate flipped horizontally by hydraulic system

- **Advantages**

  Completely embedded underground.

  Good landscape.

  Smaller footprint than vertically flip type.

- **Disadvantages**

  Maintenance not easy enough.

  Thicker wall required to install hydraulic system.

  High protection grade and cost for hydraulic system.

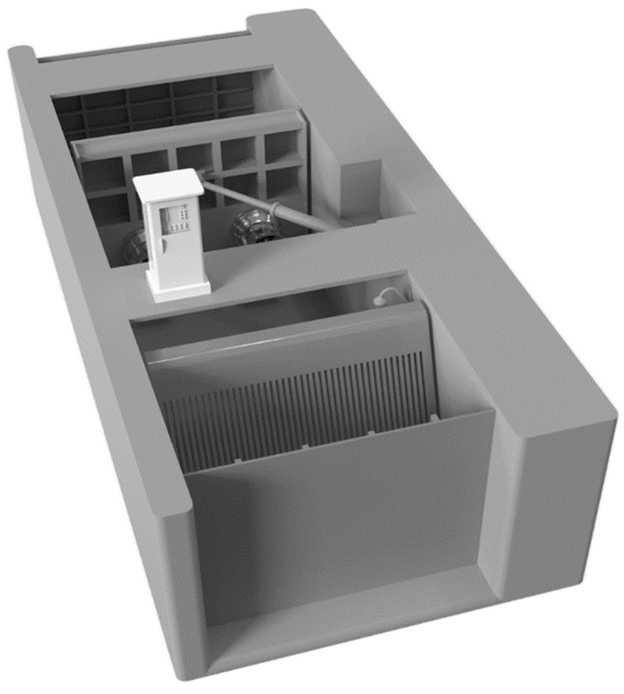

Wings
PUMPS

CERTIFIED
ISO 9001
ISO 14001
ISO 45001
ISO 50001

BUREAU VERITAS

37/1 Soi Tiwanon 48, Tiwanon Rd.,
T.Thasai, A.Muang, Nonthaburi 11000
Tel: +66 2 580 8011 - 4
www.wgflow.com

W&G
Wiroon & Gwyness