AQIRA

MODEL : **SAB**

Automatic Bar Screens and Trash Rakes

Efficient, highly reliable trash removal systems for all types of water projects

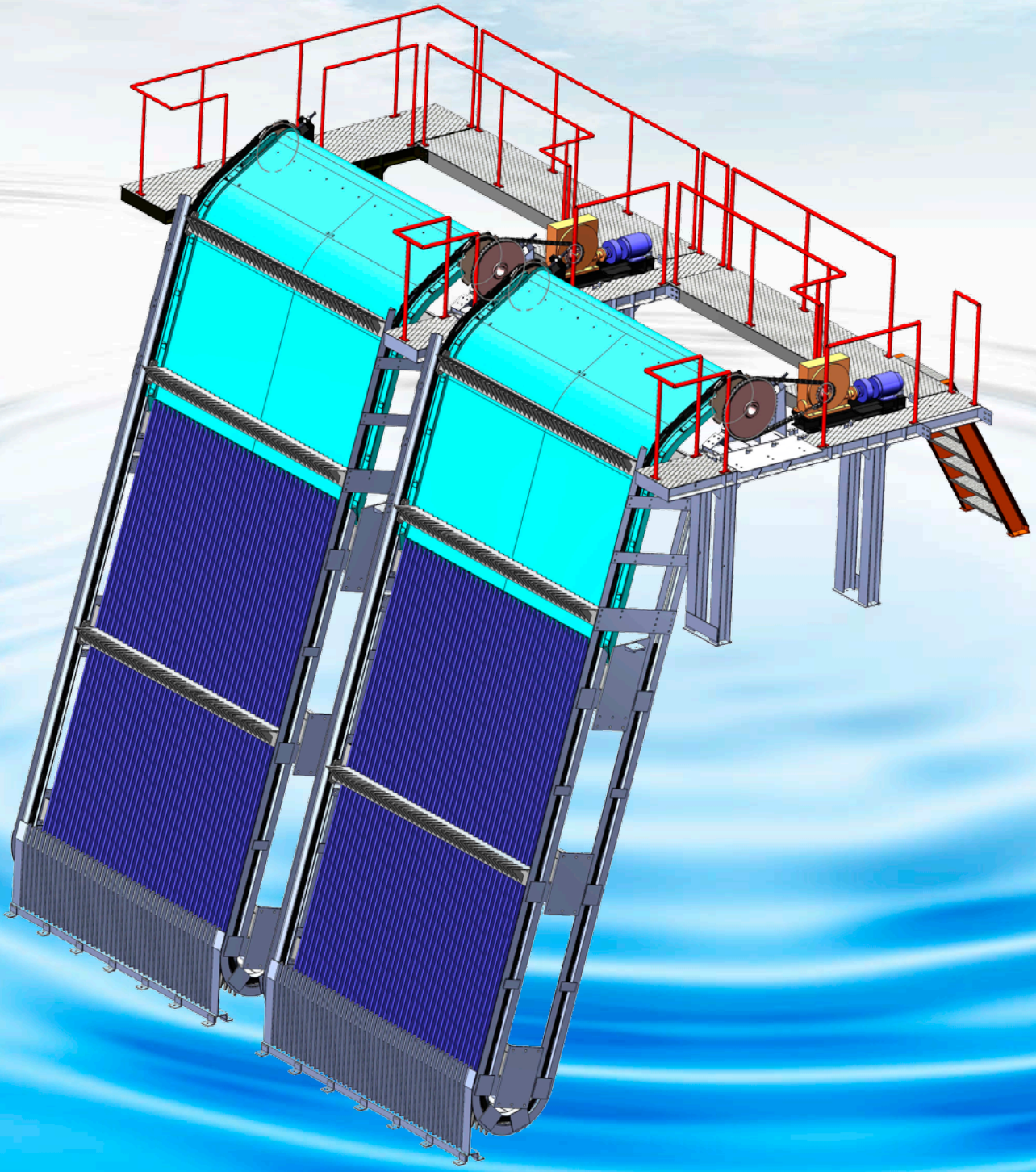

Water & Waste Water

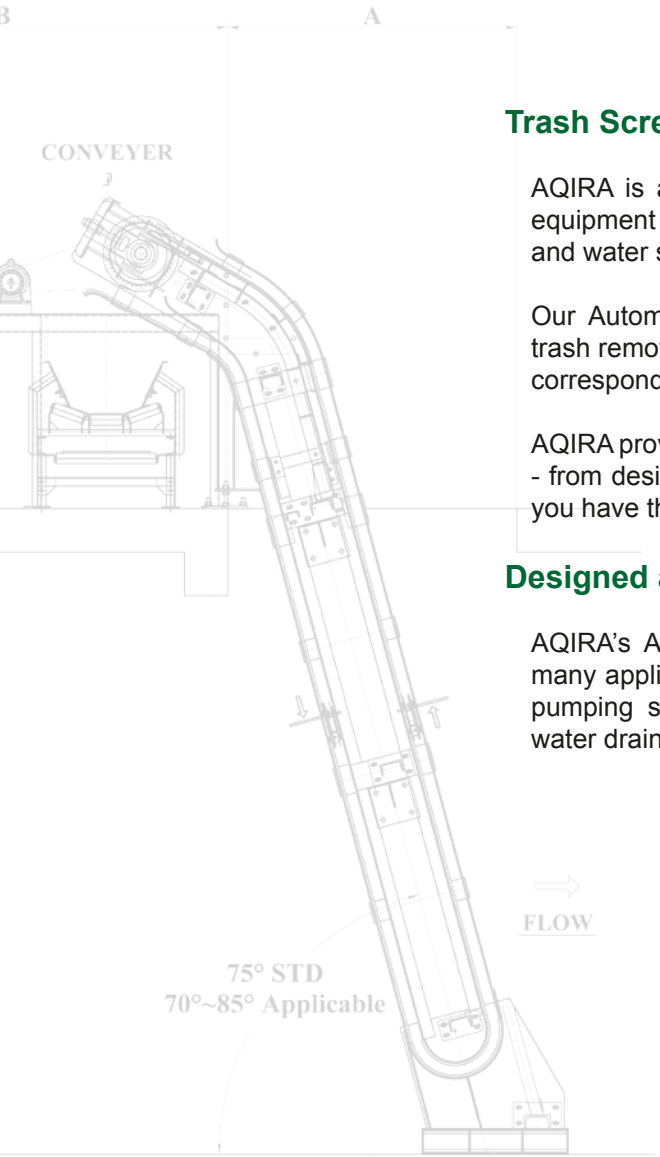

Trash Screening Solutions for Water Intakes

AQIRA is a specialized company with knowledge and expertise in supplying equipment used in the treatment of domestic and industrial water, wastewater and water supply for various markets and industries.

Our Automatic Trash Rakes and Screens provide efficient and high-volume trash removal for all types and sizes of water intakes and flood control systems, corresponding to customer requirements and their environmental demands.

AQIRA provides you with care and expertise during all the stages of your projects - from design to production, installation and through to maintenance, to ensure you have the best solution for your water screening needs.

Designed and Manufactured for Various Fields and Needs

AQIRA's Automatic Trash Rake systems are found to be highly capable in many applications such as in agriculture, potable water systems, city drainage, pumping stations, wastewater disposal plants, sewage disposal plants, rain water drainage, water treatment and trash removal at waterways.

Pump Stations/ General Usage

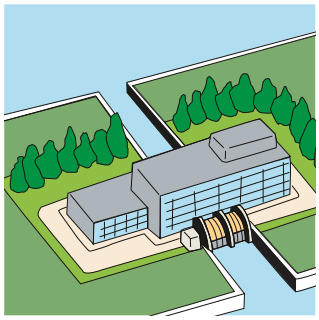

- Rain Water Drainage
- Water Treatment
- Flood Protection

Agriculture

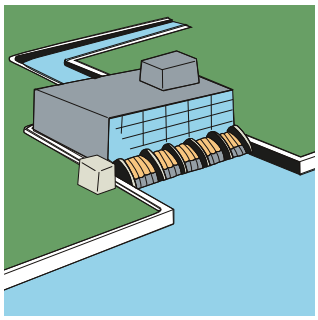

- Drainage
- Irrigation
- Stored Water Drainage

Sewage Systems

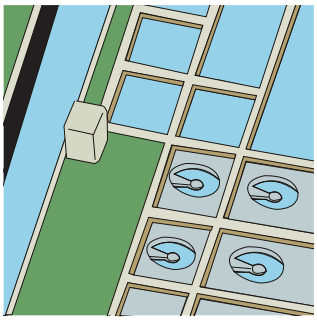

- Water Intake

Other Applications

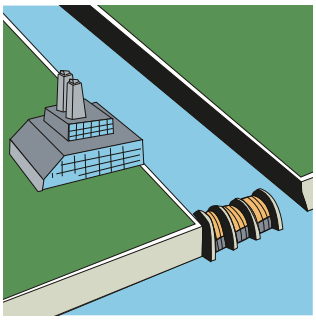

- Various Canals or Requiring Trash Removal

Durable, Reliable and Maintenance Free

Our machinery features low project costs, competitive durability, high reliability, easy operations and low maintenance costs.

Suitable rake selections fitted on the chains are rotated from the back to the front of the screen to rake trash and large debris upwards while continuing to rake up trash picked up along the main screen.

Minimum maintenance is required as the chains travel around smoothly along the guide rails. Sprocket wheels and bearings are not used in the bottom part of the frame, therefore eliminating the need for regular maintenance even in thick mud or sludge water.

A more simplified trash removal mechanism is achieved by an inclined upper frame that allows the trash be dropped continuously and smoothly onto the conveyor.

The machinery achieves better durability as the rake chain and guide rails are made of stainless steel. All parts and components that are exposed to water are coated with epoxy resins and other materials to withstand corrosion.

Sufficient torque is generated through the liquid coupling connected to the drive motor. This provides for a highly reliable drive as the system is protected from abnormal torque caused by the slip of liquid cooling.

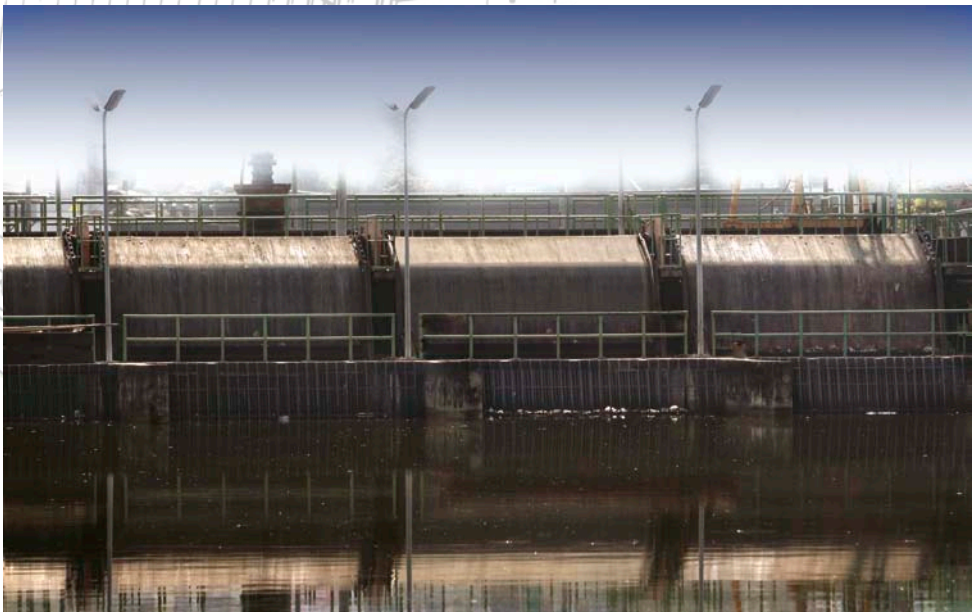

Automatic Bar Screens and Trash Rakes

Efficient, highly reliable trash removal systems for all types of water projects

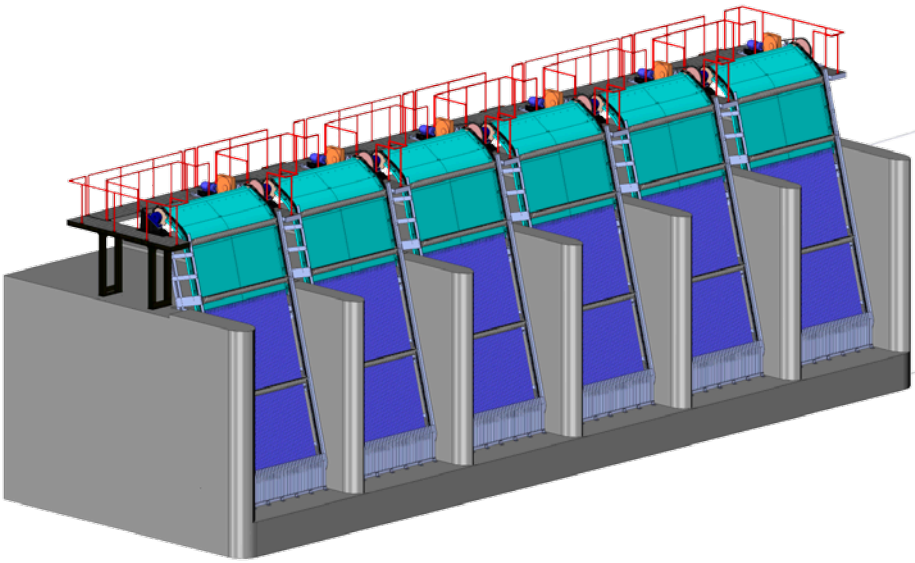

About AQIRA Bar Screens and Trash Rakes

AQIRA is a specialist in trash screening systems that offer a full range of services; from planning, designing, manufacturing, to installations, commissioning, operation and maintenance – all with integration to the overall pumping station.

We provide an optimum system plan, design and application based on our vast experience and extensive knowledge, data and information on automatic screen systems.

Our team of experts and engineers will provide professional assistance in the selection of a suitable system. Our solutions include:

- Automatic Bar Screen and Trash Rake (SAB Series),
- Automatic Fine Screen (SAF Series),
- Trash Garbage Collecting Net Cage (SMN Series) for small volumes,
- Fixed Screen and Mobile Raking System or other special designs (SAS Series).

As a standard procedure, we provide high quality control of the manufacturing and installation to optimize the overall performance and efficiency of the entire system. AQIRA is open to provide consultation to clients and interested parties.

For optimal plans and designs, high quality and speed, AQIRA will:

1. Conduct a site survey for overall planning,
2. Make recommended specifications based on thorough discussions,
3. Provide designs and drawings,
4. Submit a proposal.

Automatic Bar Screens and Trash Rakes

Efficient, highly reliable trash removal systems for all types of water projects

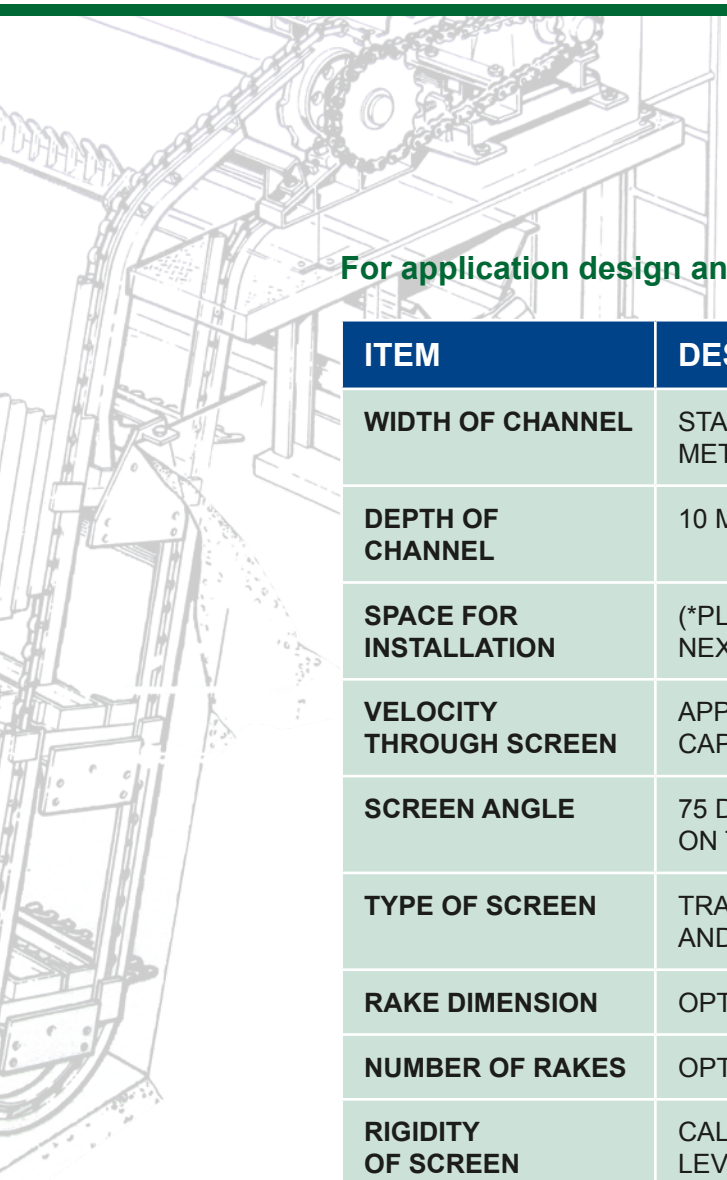

For application design and planning

ITEM	DESCRIPTION
WIDTH OF CHANNEL	STANDARD 6 METERS OR LESS. MAXIMUM UP TO 7.5 METERS.
DEPTH OF CHANNEL	10 METERS OR LESS.
SPACE FOR INSTALLATION	(*PLEASE REFER TO THE SECTIONAL DRAWING ON THE NEXT PAGE)
VELOCITY THROUGH SCREEN	APPROXIMATELY 0.8 METERS PER SECOND AT DESIGN CAPACITY.
SCREEN ANGLE	75 DEGREES. MAXIMUM UP TO 85 DEGREES DEPENDING ON THE AVAILABLE INSTALLATION SPACE.
TYPE OF SCREEN	TRASH AND GARBAGE SCREENING WITH BOTH NET AND BAR TYPES.
RAKE DIMENSION	OPTIONAL DIMENSIONS RANGE FROM 150 TO 300 MM.
NUMBER OF RAKES	OPTIONAL BETWEEN 2 TO 4 UNITS.
RIGIDITY OF SCREEN STRUCTURE	CALCULATED ACCORDING TO THE DIFFERENCE IN WATER LEVEL OF 300 TO 600 MM.
DRIVE SYSTEM	COMBINATION OF MOTORS AND CYCLO REDUCTION GEARS. (**PLEASE SEE DATA FOR OUTPUT SELECTION)
PROTECTIVE SYSTEM	THE SCREEN USES A SLIP DETECTOR SYSTEM WITH FLUID COUPLING.
STANDARD ACCESSORIES	• TOOLS, ANCHOR BOLTS AND NUTS, MOTOR COVER, PROTECTIVE DEVICES
STANDARD PAINTING	PREPARATION OF METAL SURFACE: SSPC SP-10 WET AREAS: TAR EPOXY (3 COATS to 200 µm.) DRY AREAS: RUST PREVENTIVE FINISH PAINT (PHTHALIC ACID PAINT)

Queries on any particular specification relating to usage conditions are welcome in design and planning stages.

Sectional drawing
For installation

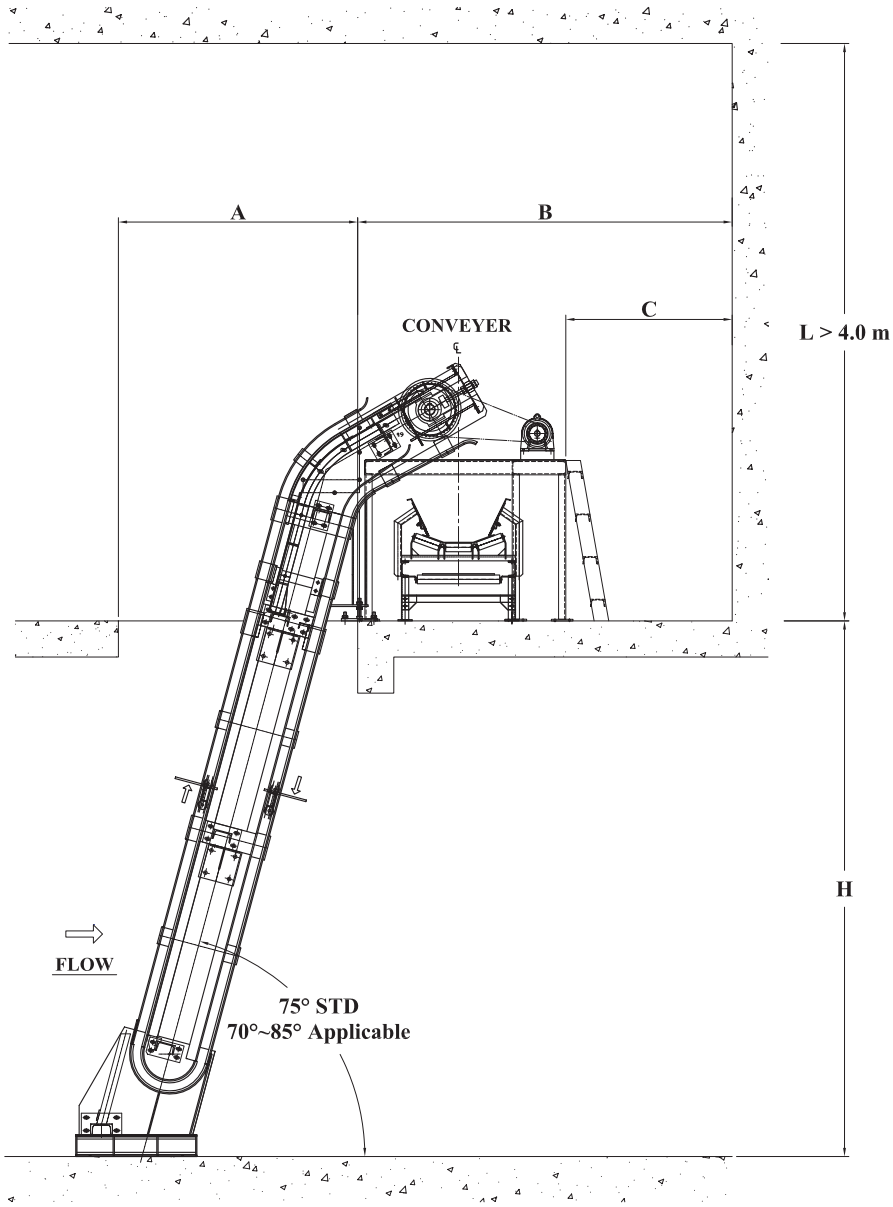

UNIT: METERS

H	A	B	C	Min L
2.0	2.0	3.0	1.0	4.0
4.0	2.5	3.0	1.0	4.0
6.0	3.0	4.0	1.0	4.0
8.0	3.5	4.0	1.0	4.0
10	4.0	4.0	1.0	4.0
12	4.5	4.0	1.0	4.0

REMARKS:

1. For installation purposes, a minimum height clearance of 4 meters is required.
2. Dimension B and C depend on the convey system such as trash boxes and conveyors.
3. All dimensions are flexible to the site conditions. In cases where space is insufficient, please consult with our sales engineers for further solutions.

Data for output selection

AUTOMATIC TRASH RAKE & SCREEN

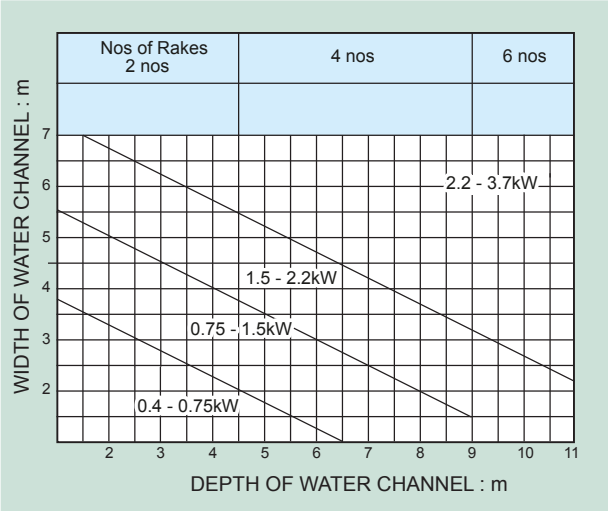

NOTE: Standard rake speed is 5 m/min.

HORIZONTAL BELT CONVEYOR

BELT WIDTH \ OVERALL LENGTH (m)	5	10	15	20	25	30	35	40	45	50
500mm	0.4-1.5kW								1.5-2.2kW	
600mm	0.75-1.5kW							1.5-2.2kW		
750mm	0.75-1.5kW				1.5-2.2kW				2.2-3.7kW	
900mm	0.75-1.5kW			1.5-2.2kW					2.2-3.7kW	

NOTE: The above requirements are applicable for three or less trash removal systems.

HOPPER (OPTIONAL)

CAPACITY (m3)	RATED THRUST Kgt (kW)	MOTOR OUTPUT kW
2	1000 {9.81} x 2 units	0.4 x 2 units
3	↓	↓
4	↓	↓
5	1000 {9.81} x 2 units	0.4 x 2 units
6	2000 {19.61} x 2 units	0.75 x 2 units
7	2000 {19.61} x 2 units	0.75 x 2 units
8	4000 {39.61} x 2 units	1.5 x 2 units

INCLINED CONVEYOR

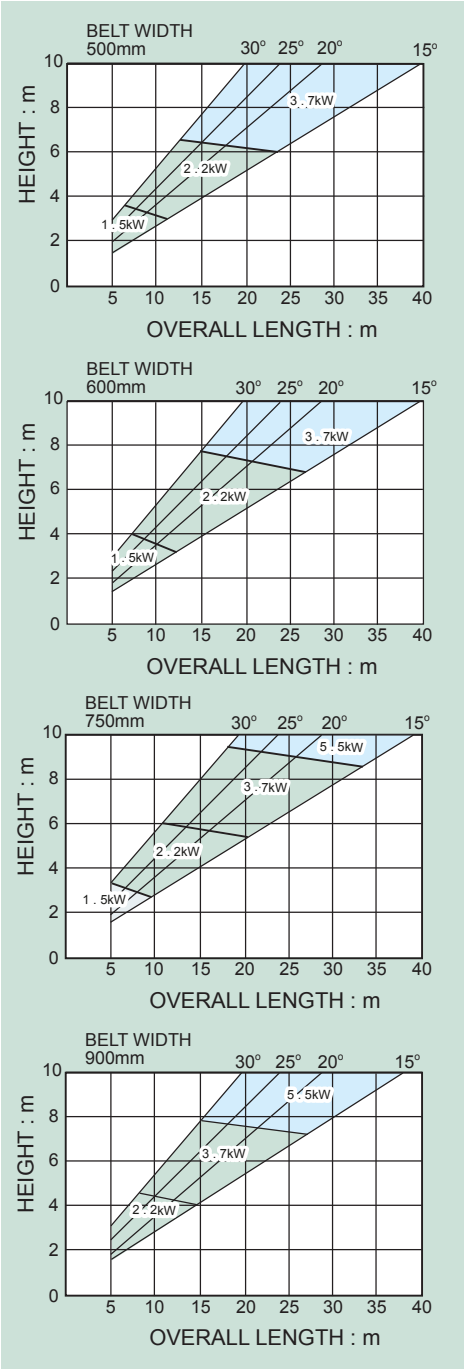

SUBMITTING YOUR INQUIRY

In order for us to provide you with a solution that is most suitable to your needs, please indicate the following details and requirements below when submitting your inquiry. Thank you.

1. Purpose, layout and other details of your pumping station.
2. Type of influent (water for general use, waste water, rain water, sewage, etc.)
3. Method of trash removal from site
4. Power source and system for operations.

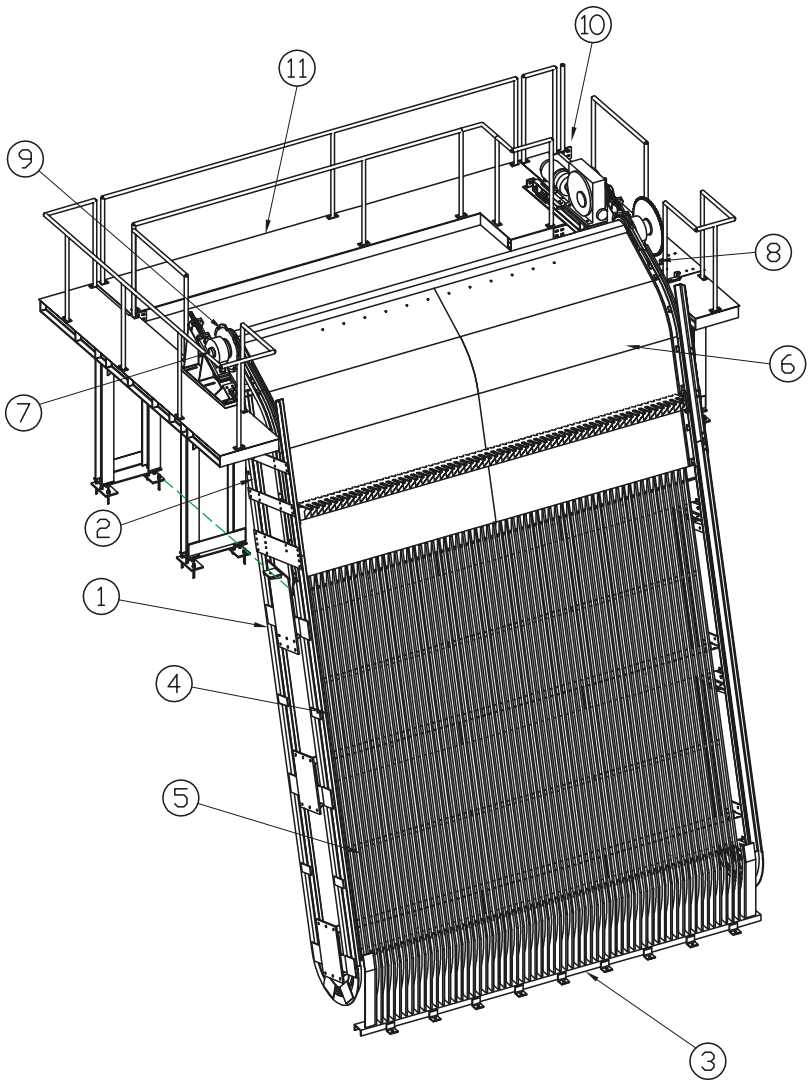

No.	DESCRIPTIONS	Q'TY	MATERIAL	STANDARD	REMARK
1	LOWER FRAME	1	SS400	JIS G3101	
2	UPPER FRAME	1	SS400	JIS G3101	
3	FRONT SCREEN	1	SS400	JIS G3101	
4	MAIN SCREEN	1	SS400	JIS G3101	
5	RAKE	4	SS400	JIS G3101	
6	APRON	1	SS400	JIS G3101	
7	SHAFT	1	S35C	JIS G4051	
8	RAKE CHAIN	1	SUS403	JIS G4303	
9	RAKE CHAIN SPROCKET	2	FCD60	JIS G5520	
10	GEAR MOTOR	1			
11	PLATFORM	1			

Note: Stainless steel SUS304, SUS316 or JIS G3125 Anti – corrosion steel are available by requested

AUTO TRASH RAKES AND SCREENS	
INTAKE CANAL WIDTH	3600 mm.
INTAKE CANAL DEPTH	5300 mm.
SCREEN PITCH	60 mm.
EFFECTIVE WIDTH OF RAKES	300 mm.
MUMBER OF RAKES	6
MOTOR OUTPUT	3.7 Kw 4 P
POWER SOURCE	AC 380 V 50 Hz.
NUMBER OF UNIT	6 UNITS

HORIZONTAL BELT CONEYOR	
TYPE	HORIZONTAL RUBBER BELT
BELT WIDTH	750 mm.
LENGTH	10500 mm.
BELT SPEED	24 m/min
MOTOR OUTPUT	2.2 Kw 4 P
POWER SOURCE	AC 380 V 50 Hz.
NUMBER OF UNIT	1 UNIT

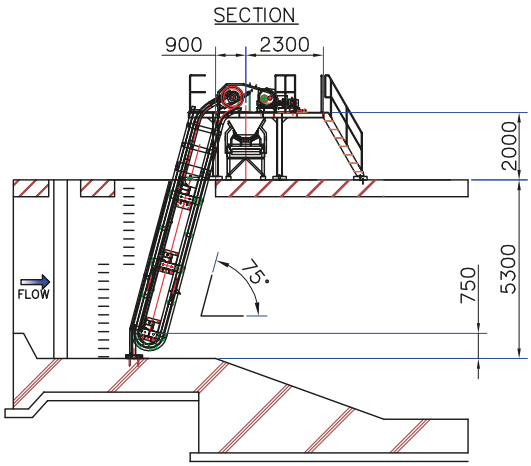

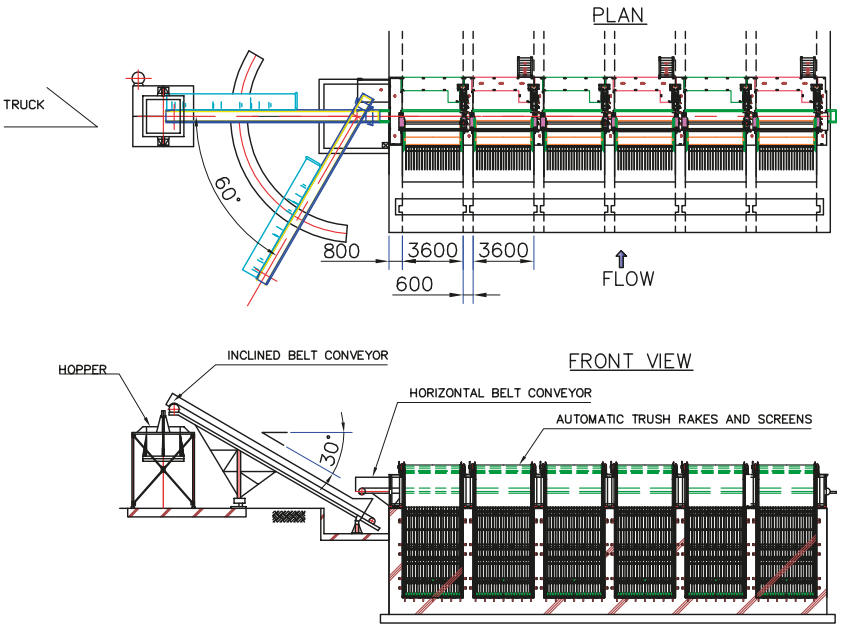

INCLINED BELT CONVEYOR	
TYPE	RUBBER BELT WITH TURNING FRAME AND RAIL
BELT WIDTH	750 mm.
BELT SPEED	31 m/min
MOTOR OUTPUT	3.7Kw 4P
POWER SOURCE	AC 380 V 50 Hz.
NUMBER OF UNIT	1 UNIT

HOPPER	
SIZE	2,000 W x 2,000 B x 1,750H MM.
VOLUME	6 M3
MOTOR OUTPUT	0.75 Kw x 2 UNITS
POWER SOURCE	AC 380 V 5O Hz.
HEIGHT UNDER HOPPER	2,8OO mm.
NUMBER OF UNIT	1 UNIT

SAMPLE ARRANGEMENT

AQIRA SK CO., LTD.

37/1 T.Thasai, Mueang, Nonthaburi 11000
Tel : +(66) 2 580 8015 Fax : +(66) 2 580 8016
e-mail : Sales@aqira.com

nqa. ISO 9001 Registered
UKAS QUALITY MANAGEMENT 015