Submersible Pump in Discharge Tube

AmaCan P

AmaCan P 400 - 290
AmaCan P 500 - 325
AmaCan P 600 - 351
AmaCan P 700 - 471
AmaCan P 800 - 471
50 Hz

Type Series Booklet

Legal information/Copyright

Type Series Booklet AmaCan P

All rights reserved. The contents provided herein must neither be distributed, copied, reproduced, edited or processed for any other purpose, nor otherwise transmitted, published or made available to a third party without the manufacturer's express written consent.

Subject to technical modification without prior notice.

© KSB SE & Co. KGaA, Frankenthal 2025-07-11

Contents

Water applications: Water Transport / Waste Water Transport, Flood Protection ... 4
Submersible Pumps in Discharge Tubes ... 4
AmaCan P ... 4
Main applications ... 4
Fluids handled ... 4
Operating data ... 4
Designation ... 4
Design details ... 5
Materials ... 6
Coating and preservation ... 6
Product benefits ... 6
Acceptance tests and warranty ... 7
Selection information ... 7
Overview of product features / selection tables ... 8
Overview of fluids handled ... 8
Overview of product features ... 9
Related documents ... 10
Purchase order specifications ... 10
Selection chart ... 11
Characteristic curves ... 12
n = 1450 rpm ... 12
AmaCan PA3 400-290, n = 1450 rpm ... 12
AmaCan PA3 500-325, n = 1450 rpm ... 14
AmaCan PA4 600-351, n = 1450 rpm ... 16
n = 960 rpm ... 18
AmaCan PA3 400-290, n = 960 rpm ... 18
AmaCan PA3 500-325, n = 960 rpm ... 20
AmaCan PA4 700/800-471, n = 960 rpm ... 22
n = 725 rpm ... 24
AmaCan PA3 700/800-471, n = 725 rpm ... 24
Pump set dimensions ... 26
Installation types ... 28
Scope of supply ... 29
Accessories ... 30
Dimensions of the flow-straightening vane ... 30
Support rope and turnbuckle in the discharge tube ... 31
Discharge tube cover with cable gland ... 32
Design: with welding sleeve ... 32
Design variant with transit frame (up to 1 bar) ... 33
General assembly drawings ... 34

Water applications: Water Transport / Waste Water Transport, Flood Protection

Submersible Pumps in Discharge Tubes

AmaCan P

Main applications

- Irrigation pumping stations
- Drainage pumping stations
- Stormwater pumping stations
- Raw water pumps and clean water pumps in waterworks and waste water treatment plants
- Cooling water pumps in power stations and industry
- Industrial water supply
- Water pollution control
- Flood control
- Aquaculture

Fluids handled

- Waste water
- Sludge
- Surface water
- Stormwater
- Grey water
- Seawater
- Brackish water

Operating data

Table 1: Operating properties

Characteristic		Value
Flow rate	Q [l/s]	≤ 1450
	Q [m^3/h]	≤ 5220
Head	H [m]	≤ 9
Motor rating	P_2 [kW]	≤ 160
Fluid temperature	T [°C]	≤ +40

Designation

Example: AmaCan PA3 400-290 / 15 6 UW G1 IE4

Table 2: Designation key

Code	Description	
AmaCan	Type series	
P	Impeller type	
	P	Propeller
A	Impeller variant	
	A	
3	Number of blades	
	3	
	4	
400	Nominal diameter of the discharge tube [mm]	
290	Nominal impeller diameter [mm]	
15	Motor size	
6	Number of motor poles	
UW	Motor version	
	UT, UV	Three-phase asynchronous motor, non-explosion-proof
	XT, XV	Three-phase asynchronous motor, explosion-proof Ⓔx II2G Ex db h IIB T3 Gb
	UW	Three-phase synchronous motor, non-explosion-proof
	XW	Three-phase synchronous motor, explosion-proof Ⓔx II2G Ex db h IIB T3 Gb
G1	Material variant	
	G1	Grey cast iron, standard material variant
	G2	Cast iron, casing wear ring made of stainless steel
	G3	Grey cast iron with Zn anodes, shaft made of 1.4057 stainless steel
IE4	Motor efficiency classification[1]	
	-[2]	No efficiency classification
	IE3	Premium Efficiency
	IE4	Super Premium Efficiency

1580.58/01-EN

1 The IEC 60034-30 standard is not binding for submersible motor pumps. Efficiencies are calculated / determined by analogy with the measurement method specified in IEC 60034-2. The marking is used for submersible motors that achieve efficiency levels similar to those of standard motors acc. to the IEC 60034-30 standard.

2 Blank

Design details

Design

- Fully floodable submersible pump in discharge tube (submersible motor pump)
- Not self-priming
- Close-coupled design
- Single-stage
- Vertical installation

Drive

- Motor versions UT, UV, XT, XV
  - Three-phase asynchronous squirrel-cage motor
  - Enclosure: IP68 to EN/IEC 60529
  - Type of protection Ex db IIB (applies to explosion-proof pump sets only)
- Motor versions UW, XW
  - Three-phase synchronous motor with permanent-magnet rotor
  - Enclosure: IP68 to EN/IEC 60529
  - Type of protection Ex db IIB (applies to explosion-proof pump sets only)

Shaft seal

- Two bi-directional mechanical seals in tandem arrangement, with liquid reservoir
- Leakage chamber

Impeller type

- Axial propeller in ECB design[3)]

Bearings

- Grease-lubricated rolling element bearings

Monitoring equipment

Various sensor packages are available for pump/pump set monitoring:

- **Basic**
  - Motor temperature monitoring (PTC thermistor)
  - Leakage sensor in the motor space
  - Mechanical seal leakage sensor (float switch)
  - Bearing temperature monitoring, pump end (Pt100)[4)]
- **Basic+**[5)]
  - Motor temperature monitoring (PTC thermistor)
  - Leakage sensor in the motor space
  - Mechanical seal leakage sensor (float switch)
  - Bearing temperature monitoring, drive end (Pt100)[6)]
  - Bearing temperature monitoring, pump end (Pt100)
- **Premium**
  - Motor temperature monitoring (PTC thermistor)
  - Leakage sensor in the motor space
  - Mechanical seal leakage sensor (float switch)
  - Bearing temperature monitoring, drive end (Pt100)
  - Bearing temperature monitoring, pump end (Pt100)
  - Vibration monitoring
  - Motor temperature measurement (Pt100)

The sensor information can optionally be evaluated via AmaControl using the live diagnosis function:

- Directly on site with the KSB INTspector app
- In additional external systems via ModBus

3 ECB (EverCleanBlade) = self-cleaning blade contour
4 Exception: Size 400-290 is not fitted with pump-end bearing temperature monitoring.
5 Exception: Sizes 500-325 and 600-351 are not available with the sensor package Basic+.
6 Exception: Size 400-290 is not fitted with motor-end bearing temperature monitoring.

Materials

Table 3: Overview of materials depending on material variant

Part No.	Description	Material variant		
		G1[7]	G2	G3[8] (seawater variant)
112	Pump bowl	EN: EN-GJL-250 / ASTM: A 48 Class 35 B		
138	Bellmouth	EN: EN-GJL-250 / ASTM: A 48 Class 35 B		
230	Impeller	EN: 1.4517 / ASTM: A 890		
350/330	Bearing housing / bearing bracket	EN: EN-GJL-250 / ASTM: A 48 Class 35 B		
360	Bearing cover	EN: EN-GJL-250 / ASTM: A 48 Class 35 B		
412	O-ring	EN/ASTM: NBR[9] EN: (Viton-FPM)[10] / ASTM: (Viton-FKM)[10]		
433	Mechanical seal (pump end)	SiC/SiC		
	Mechanical seal (drive end)	Carbon/SiC		
502	Casing wear ring	EN: EN-GJL-250 / ASTM: A 48 Class 35 B	Stainless steel	
571	Bail	EN: Stainless steel / EN-GJS-500-7 / EN-GJS-400-15[11]/ ASTM: Stainless steel / A536: 70-50-05 / A 536: 60–40–18[11]		
811	Motor housing	EN: EN-GJL-250 / ASTM: A 48 Class 35 B		
812	Motor housing cover	EN: EN-GJL-250 / ASTM: A 48 Class 35 B		
818	Shaft (rotor)	EN: 1.4021/20Cr13/ ASTM: A 276 Type 420		EN: 1.4057/ ASTM: A 276 Type 431
834	Cable gland	-		
	Cable gland housing	EN: EN-GJL-250 / ASTM: A 48 Class 35 B		
Var.	Bolts/screws	Stainless steel		
99-16	Anode	-		Zn
Other materials on request				

Duplex stainless steel (1.4517 or technically equivalent material)

This type of carbon steel is resistant to cavitation, has excellent strength values and is used for high circumferential speeds. An excellent resistance to pitting corrosion makes ferritic-austenitic stainless carbon steel a popular choice for pumping acidic waste water with a high chloride content as well as seawater and brackish water. Thanks to its good chemical resistance, e.g. against waste water containing phosphorous and sulphuric acid, this material is used in a wide range of applications in the chemical industry and process engineering. Pumps made of duplex stainless steel have a very long service life, even when handling brines, chemical waste water (pH 1 - 12), grey water and landfill leachate.

Coating and preservation

Paint

- **Surface treatment:** SA 2 1/2 (SIS 055900) AN 1865
- **Primer:** primer coat on unfinished casting
- **Top coat:** environmentally friendly KSB standard coating (RAL 5002)

Special coating

- Available on request (extra charge and a longer delivery period apply).

Product benefits

- The pump's own weight ensures self-centring seating in the discharge tube, and an O-ring seals it; quick to install or remove.
- High-efficiency motors and variable hydraulic systems for optimum hydraulic efficiency and energy efficiency
- The slim motor keeps discharge tube flow losses down.
- High reliability thanks to bearing temperature monitoring, vibration sensor, thermal motor protection, leakage sensors in the motor space and connection space as well as leakage monitoring of the mechanical seal system.
- Low-vibration hydraulic system; inlet ribs and optimised bellmouth for vortex-free inflow.

1580.58/01-EN

7 Only possible for sizes 400-290 and 500-325
8 Pump set with cathodic protection (anodes to be checked every 6 to 12 months) and top coat of 250 µm
9 Nitrile rubber (Perbunan)
10 FPM/FKM fluorocarbon rubber variant available as an option against a surcharge
11 Size 400-290: stainless steel; size 500-325: EN-GJS-500-7; from size 600-351: EN-GJS-400-15

- Absolutely water-tight resin-sealed cable entries prevent any water from entering the motor – even in the event of a damaged cable.
- Highest operating reliability by casing wear ring with groove for flushing
- IIoT[12)]-capable: Internal sensor module and AmaControl analysing device can be used.

Acceptance tests and warranty

Functional test

- Every pump undergoes functional testing to KSB standard ZN 56525.
- Hydraulic values are guaranteed to EN ISO 9906 Class 2B.

Acceptance inspections/tests

- Acceptance test to ISO/DIN or comparable standards available against a surcharge.
- Acceptance inspections/tests to Hydraulic Institute on request.

Warranty

- Quality is assured by means of an audited and certified quality assurance system to DIN EN ISO 9001.

Selection information

Information for pump selection

The guaranteed point of submersible pumps in discharge tubes is measured at a head 0.5 m above the motor (DIN 1184). The documented characteristic curves refer to this data. This must be taken into account when calculating system losses. The indicated heads and performance data apply to pumped fluids with a density $\rho = 1\ kg/dm^3$ and a kinematic viscosity v of up to 20 mm^2/s.

- Adjust the power input to the density of the fluid handled: P_2 (required) = ρ [kg/dm^3] (fluid handled) × P_2 (documented)
- Select the operating point with the largest power input within an operating range. Select a motor size providing a power reserve to compensate the tolerances in the system characteristic / pump characteristic.

Table 4: Recommended motor power reserve[13)]

P_2	Reserve		
[kW]	Mains operation	With frequency inverter	
		Motor version	
		UV, XV, UT, XT	UW, XW
≤ 30	10 %	15 %	10 %
> 30	5 %	10 %	5 %

Intake chamber

Determine the minimum water level t_{1min} (diagram in general arrangement drawing):
The minimum water level t_{1min} is the water level required in the pump's suction chamber to ensure:

- that there is a sufficient liquid cover above the hydraulic system (propeller) (shown in diagram depending on pump size)
- that the pump does not draw in air-entraining vortices (shown in diagram depending on flow rate)
- that there is no cavitation in the hydraulic system (check against the $NPSH_{required}$ value indicated in the technical literature). The following conditions must be met:
  - $NPSH_{available} > NPSH_{required}$ + safety allowance
  - $NPSH_{available} = 10.0 + (t_1 - t_3 - h_7/2)$
  - Safety allowance:
    up to $Q_{opt} \Rightarrow 0.5$ m
    larger than $Q_{opt} \Rightarrow 1.0$ m

Head (H)

The total pump head is composed as follows:
$H = H_{geo} + \Delta H_V$

H_{geo} (static head)

- Without discharge elbow: difference between the suction-side water level and the overflow edge
- With discharge elbow: difference between suction-side and discharge-side water level

ΔH_V (losses in the system)

- Starting 0.5 m downstream of the pump: e.g. pipe friction, elbow, swing check valve, etc.

Inlet losses, riser losses and elbow losses

Losses are caused by the inlet, riser and elbow (and/or free discharge).

- Losses in the riser up to the indicated reference level (0.5 m above the motor) are taken into account in the documented characteristic curves.
- Inlet and elbow losses are system losses. These losses must be taken into account for selection.
- For information on structural requirements, pump installation and pump sump design please refer to the KSB know-how brochure "Planning Information: Amacan Submersible Pumps in Discharge Tubes" 1581.025.

12 IIoT = Industrial Internet of Things
13 If larger power reserves are stipulated by local regulations, these larger reserves must be provided.

Overview of product features / selection tables

Overview of fluids handled

Table 5: Selection aid for material variants and fluid temperature per fluid

Fluid handled[14]	Max. permissible fluid temperature [°C]	Material variant	Increased clearance	Casing wear ring with a groove for flushing[15]	Screen[16]	Comments, further recommendations
Waste water						
▪ Industrial, corrosive, non-abrasive, slightly acidic; pH value ≥ 6	40	G2	○	○	✓	Two-component high solid epoxy finish coat (RAL 5002) 250 µm required
▪ Industrial, corrosive, non-abrasive, with lacquer/paint/varnish suspensions	40	G2	○	○	○	Lacquer/paint/varnish suspension = free of solvents
▪ Industrial, corrosive, non-abrasive fluids containing faeces	40	G2	✓	✓	✓	-
▪ Industrial, corrosive, non-abrasive fluids not containing faeces	40	G2	○	○	✓	-
▪ Municipal, cleaned	40	G1	○	○	✓	-
Suspended solids, water/sand mixture	40	G2	✓	○	○	Up to 200 mg/l
Sludge	40	G1	✓	✓	○	Up to 2 % dry solids content
Water, seawater and brackish water	25[17]	G3	○	○	○	Anodes[18] and two-component high solid epoxy finish coat (RAL 5002) 250 µm required
Water, cooling water	40	G1	○	○	○	-
Water, surface water						
▪ River water	40	G1	✓	✓	✓	-
▪ No details specified	40	G1	✓	✓	✓	-
▪ Lake water, fresh water	40	G1	○	○	✓	-
▪ Lake water, dam water	40	G1	○	○	○	-
Water, stormwater						
▪ With strainer	40	G1	○	○	○	-
▪ Without strainer	40	G1	✓	✓	✓	-
Water, contaminated water						
▪ Slightly contaminated water	40	G1	○	○	○	-
▪ Combined sewage, with strainer	40	G1	○	○	○	-
▪ Combined sewage, without strainer	40	G1	✓	✓	✓	-
▪ Combined sewage containing faeces	40	G1	✓	✓	✓	-
▪ Combined sewage not containing faeces	40	G1	✓	✓	✓	-
Water, clean water	40	G1	○	○	○	-

Table 6: Symbols key

Symbol	Description
✓	Required
○	Optional
-	Not required

1580.58/01-EN

14 Fluids to be handled which are not listed in this table usually require higher-grade materials. Consult us.
15 Using a casing wear ring with a groove for flushing will reduce the efficiency by 2 % to 3 %.
16 See table (⇨ Table 7)
17 Consult us for t > 25 °C (stainless steel variant).
18 Efficiency reduced by 2 % to 3 %; anode to be checked every 6 to 12 months

Table 7: Space between screen bars

Size	Required space between screen bars [mm]
400-290	30
500-325	30
600-351	30
700-471	40
800-471	40

Overview of product features

Table 8: Material variants (G1, G2, G3)

Feature	Motor version						
	UVG/XVG			UWG/XWG			UTG/XTG
Motor size							
4-pole	11 4 ... 21 4	22 4 ... 40 4	35 4 ... 60 4	-	-	-	-
6-pole	7 6	12 6	-	11 6 ... 18 6 (75 Hz) 7 6 (50 Hz)	25 6 ... 40 6 (75 Hz) 16 6 (50 Hz)	-	47 6 ... 120 6
8-pole	-	-	-	-	-	45 8 ... 65 8 (100 Hz)	30 8 ... 95 8
Explosion protection							
Version U...	Not explosion-proof						
Version X...	Ⓔx II2G Ex db h IIB T3 Gb						
Motor							
Starting method	DOL or star-delta (690 V only DOL)	DOL		Frequency inverter, PumpDrive R			DOL or star-delta (690 V only DOL)
Voltage	400 V[19]			Operation on a frequency inverter required[20]			400 V
Cooling	Cooled by surrounding fluid						
Immersion depth	30 m max.						
Power cables							
Type	See (⇨ Table 9)						
Length	10 m[21]						
Cable entry	Absolutely water-tight						
Sealing elements							
Elastomer seals	Nitrile butadiene rubber NBR[22]						
Shaft seal	Bellows-type mechanical seal[23]						
Monitoring equipment							
Sensor package	Basic/Basic+/Premium (⇨ Page 5)						
Coating	Environmentally friendly KSB standard coating, colour RAL 5002[24]						
Installation	BU, BUS, BG, CU, CUS, CD, DU, DUS, DG (⇨ Page 26)						
Maximum fluid temperature							
Material variant G1	40 °C						
Material variant G2	40 °C						
Material variant G3	25 °C						
Tests/inspections							
Hydraulic system	KSB standard (ZN 56525)[25]						
General	KSB standard (ZN 56525)[25]						

19 Optional: 380 V, 415 V, 500 V, 690 V
20 Suitable for operation on power supply networks from 380 V to 500 V
21 Optional: up to 40 m
22 Optional: Viton = fluorocarbon rubber FPM
23 Optional: mechanical seal with covered spring
24 Optional: 250 µm
25 Optionally to ISO 9906/1/2/A

Table 9: Power cable overview

Feature	Power cable and sensor cable		Sensor cable
	S1BN8-F	S07RC4N8-F	S05BN8-F
Design	Standard	Optional	Optional
Rated voltage	1000 V	750 V	-
EMC screening	-	✓	✓
Insulation material	EPR[26)]	EPR[26)]	Elastomer mixture
Maximum continuous temperature of insulation	90 °C	90 °C	90 °C
For permanent immersion in waste water to DIN VDE 0282-16/HD22.16	✓	✓	✓

Related documents

- General Arrangement Drawings 1580.398
- Motor Data Booklet 1580.505
- Planning Information 1581.025

Purchase order specifications

- Pump designation
- Flow rate Q, head H_{total}
- Type of fluid handled and fluid temperature
- Voltage, frequency, starting method, cable length
- Quantity and language of operating manuals
- Required accessories
  - For discharge tube drawings and discharge tubes, a drawing of the building indicating all required elevations and the type of installation is required.
  - For flow-straightening vanes indicate the type of installation and design (with or without suction umbrella).
  - For a support rope indicate dimension "L", the number of additional lifting rings (depending on the lifting height of the lifting equipment) as well as the elevations and type of installation.

Always define dimension "L" when ordering a support rope to allow the correct length to be determined. The lifting height of the crane must be taken into account when ordering a support rope. This determines the number of lifting rings required for installing the pump in or removing it from the discharge tube.

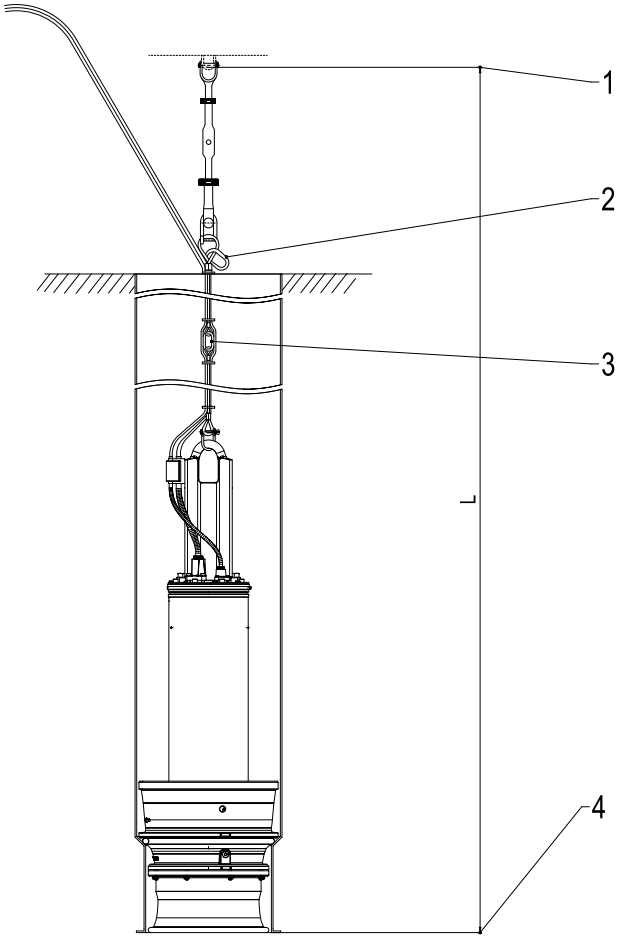

1	Suspension arrangement attached to cross-beam (BU/BUS/BG) or cover (CU/CUS/CG/DU/DUS/DG)
2	Lifting ring (standard, included in the scope of supply)
3	Optional (intermediate) lifting ring(s)
4	Lower edge of discharge tube = lower edge of pump

1580.58/01-EN

The support rope is an accessory and can be supplied with additional lifting rings and a support spacer as an option. The standard design is supplied without intermediate lifting ring(s).

26 EPR = ethylene propylene rubber

Selection chart

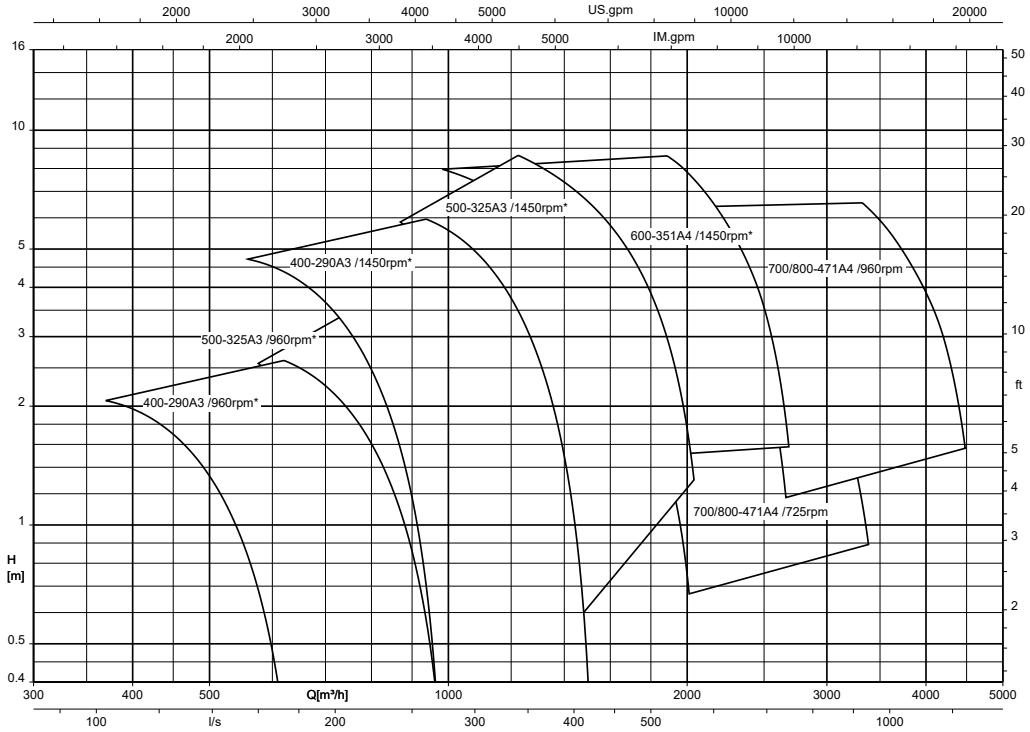

*	Hydraulic systems with UV/XV three-phase asynchronous motor n = 1450 rpm, 960 rpm Hydraulic systems with UW/XW three-phase synchronous motor (efficiency class IE4) n = 1500 rpm, 1000 rpm

Characteristic curves

n = 1450 rpm

AmaCan PA3 400-290, n = 1450 rpm

Characteristic curves in acc. with ISO 9906 / 2 / 2B. n = speed

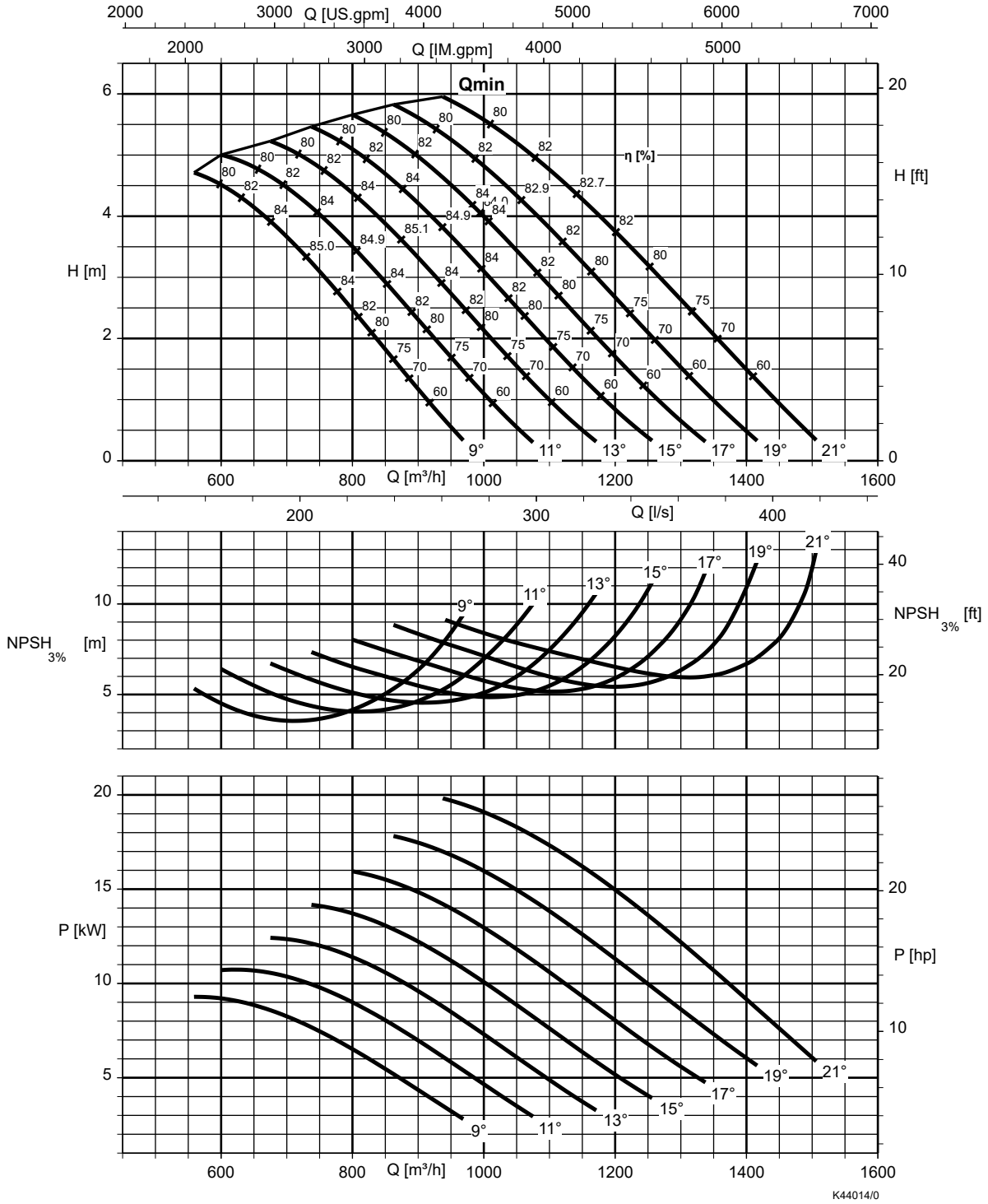

1580.58/01-EN

Table 10: Free passage

Angle [°]	Free passage [mm]	Angle [°]	Free passage [mm]
9	65	17	65
11	65	19	65
13	65	21	65
15	65		

Table 11: Rated power P_2 and mass moment of inertia J[27)]

Size	Motor	Rated power P_2 [kW]	Mass moment of inertia J
		-[28)]	[kgm²]
PA3 400-290	114UV/XV	11	0,10
PA3 400-290	154UV/XV	15	0,11
PA3 400-290	184UV/XV	18,5	0,11
PA3 400-290	214UV/XV	22	0,12

Table 12: Rated power P_2 and mass moment of inertia J[27)]

Size	Motor[29)]	Rated power P_2 [kW]	Mass moment of inertia J
		IE4	[kgm²]
PA3 400-290	116UW/XW	11	0,12
PA3 400-290	156UW/XW	15	0,14
PA3 400-290	186UW/XW	18,5	0,15

27 These values are valid for a density = 1 kg/dm³ and a kinematic viscosity of up to 20 mm²/s.
28 - = No efficiency classification
29 Motor version UW/XW is a synchronous motor with a synchronous speed of 1500 rpm.

AmaCan PA3 500-325, n = 1450 rpm

Characteristic curves in acc. with ISO 9906 / 2 / 2B. n = speed

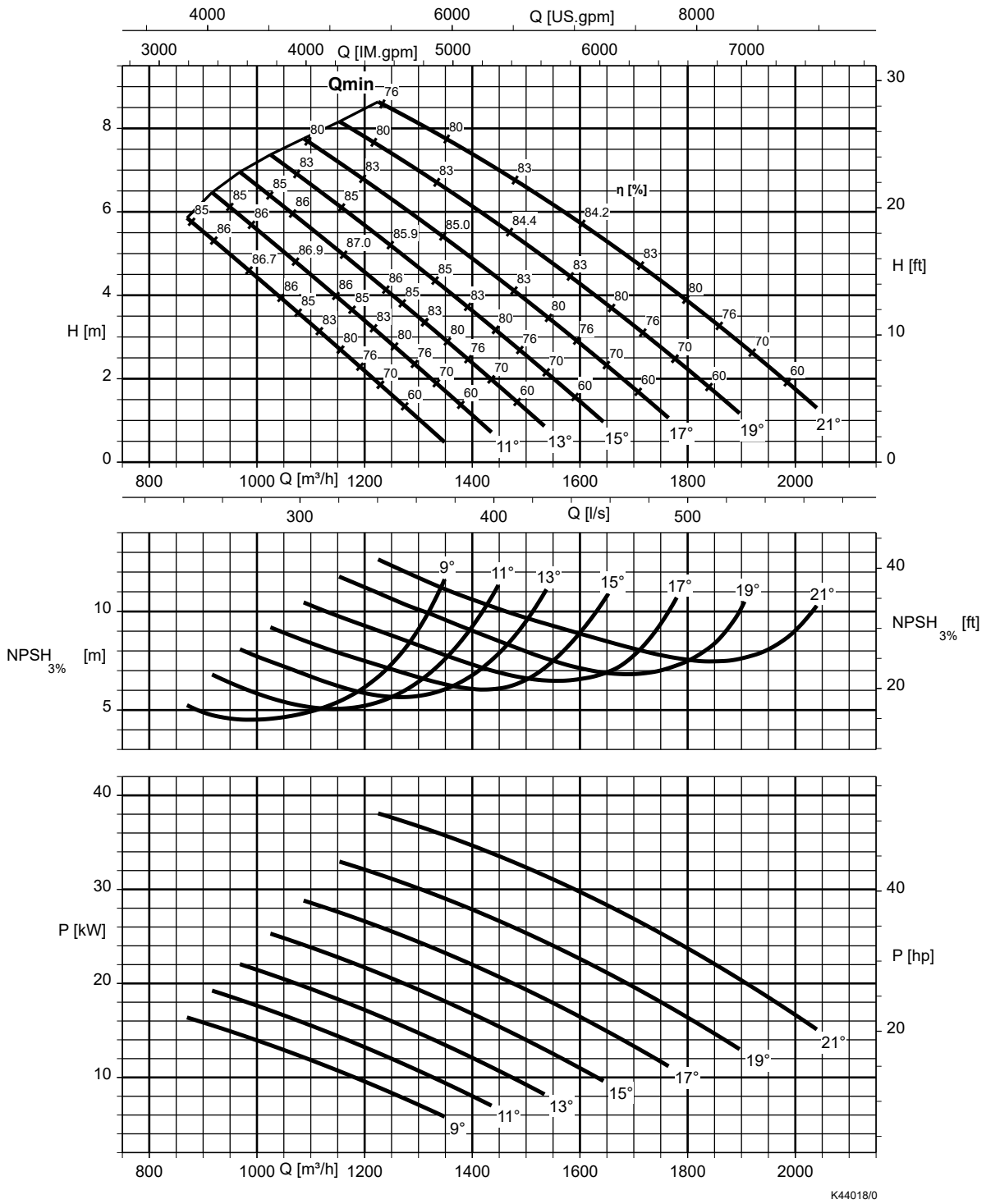

1580.58/01-EN

Table 13: Free passage

Angle [°]	Free passage [mm]	Angle [°]	Free passage [mm]
9	65	17	65
11	65	19	65
13	65	21	65
15	65		

Table 14: Rated power P_2 and mass moment of inertia J[30)]

Size	Motor	Rated power P_2 [kW]	Mass moment of inertia J
		-[31)]	[kgm²]
PA3 500-325	224UV/XV	22	0,20
PA3 500-325	304UV/XV	28	0,21
PA3 500-325	344UV/XV	34	0,24
PA3 500-325	404UV/XV	40	0,25

Table 15: Rated power P_2 and mass moment of inertia J[30)]

Size	Motor[32)]	Rated power P_2 [kW]	Mass moment of inertia J
		IE4	[kgm²]
PA3 500-325	256UW/XW	25	0,25
PA3 500-325	306UW/XW	32	0,29
PA3 500-325	406UW/XW	42	0,33

30 These values are valid for a density = 1 kg/dm³ and a kinematic viscosity of up to 20 mm²/s.
31 - = No efficiency classification
32 Motor version UW/XW is a synchronous motor with a synchronous speed of 1500 rpm.

AmaCan PA4 600-351, n = 1450 rpm

Characteristic curves in acc. with ISO 9906 / 2 / 2B. n = speed

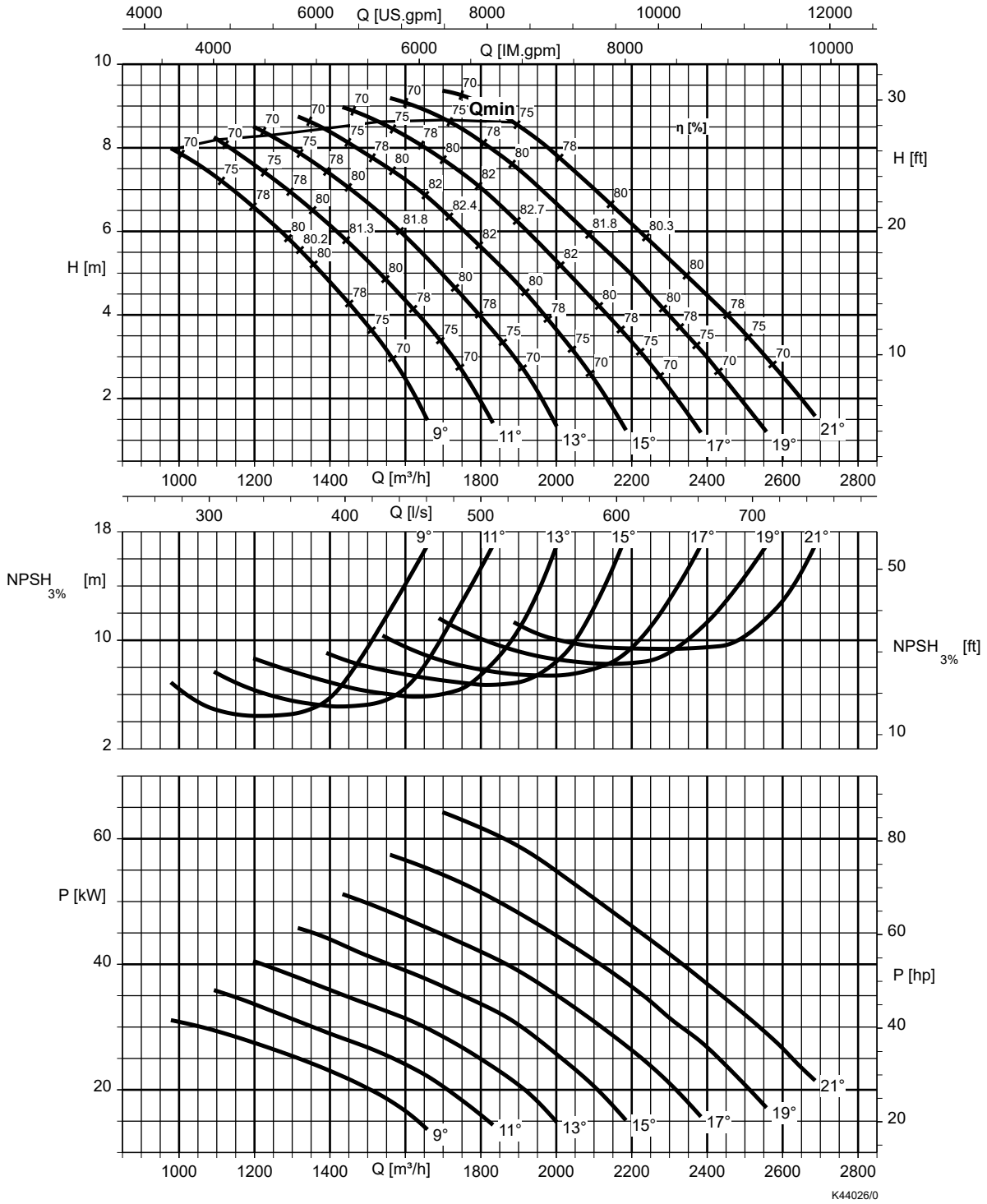

1580.58/01-EN

Table 16: Free passage

Angle [°]	Free passage [mm]	Angle [°]	Free passage [mm]
9	50	17	70
11	55	19	75
13	60	21	80
15	65		

Table 17: Rated power P_2 and mass moment of inertia J[33)]

Size	Motor	Rated power P_2 [kW]	Mass moment of inertia J
		-[34)]	[kgm²]
PA4 600-351	354UV/XV	35	0,37
PA4 600-351	454UV/XV	45	0,40
PA4 600-351	554UV/XV	55	0,42
PA4 600-351	604UV/XV	60	0,44

Table 18: Rated power P_2 and mass moment of inertia J[33)]

Size	Motor[35)]	Rated power P_2 [kW]	Mass moment of inertia J
		IE4	[kgm²]
PA4 600-351	458UW/XW	45	0,47
PA4 600-351	578UW/XW	57	0,52
PA4 600-351	658UW/XW	65	0,55

1580.58/01-EN

33 These values are valid for a density = 1 kg/dm³ and a kinematic viscosity of up to 20 mm²/s.
34 - = No efficiency classification
35 Motor version UW/XW is a synchronous motor with a synchronous speed of 1500 rpm.

n = 960 rpm

AmaCan PA3 400-290, n = 960 rpm

Characteristic curves in acc. with ISO 9906 / 2 / 2B. n = speed

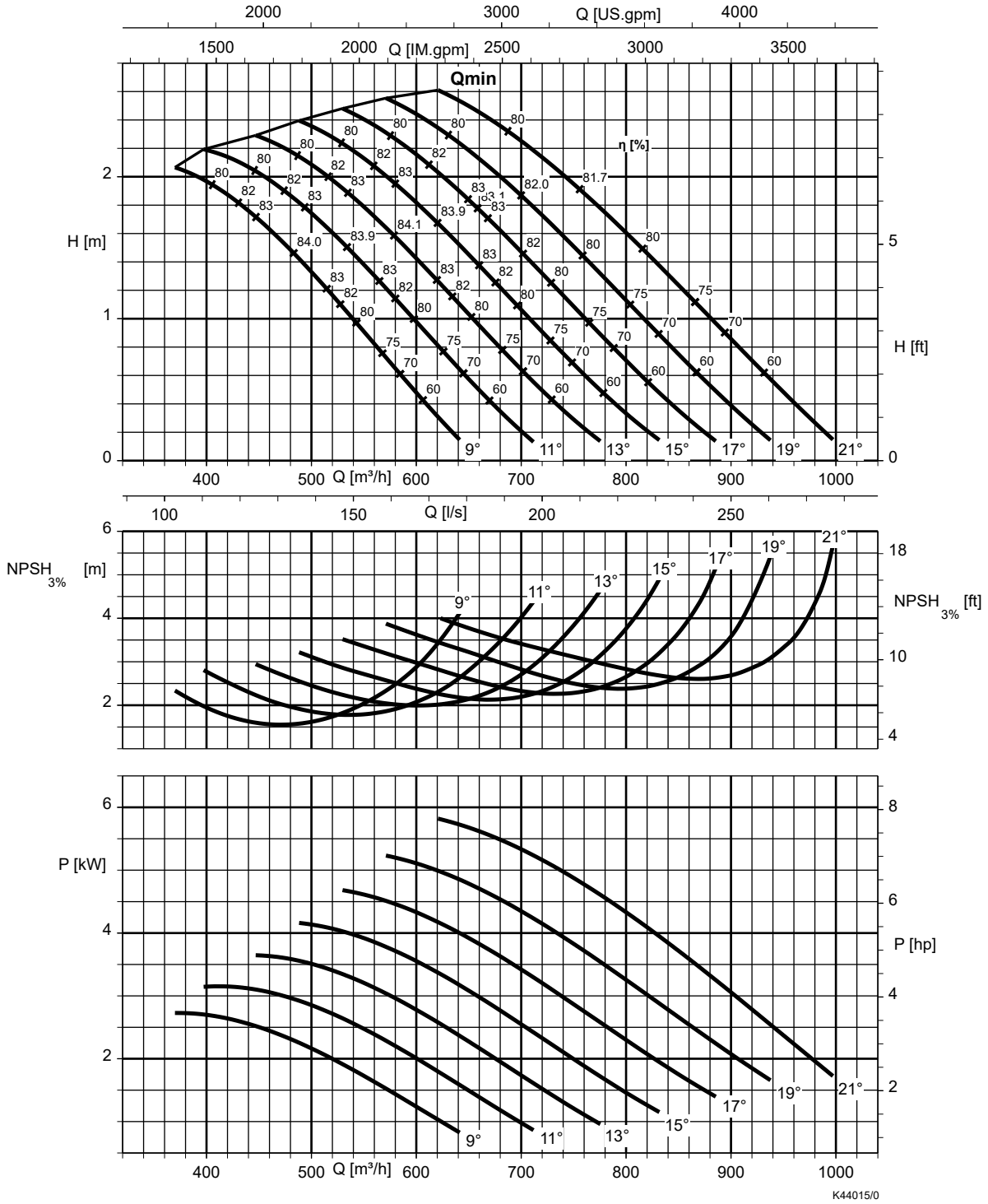

1580.58/01-EN

Table 19: Free passage

Angle [°]	Free passage [mm]	Angle [°]	Free passage [mm]
9	65	17	65
11	65	19	65
13	65	21	65
15	65		

Table 20: Rated power P_2 and mass moment of inertia J[36)]

Size	Motor	Rated power P_2 [kW]	Mass moment of inertia J
		-[37)]	[kgm²]
PA3 400-290	76UV/XV	7,5	0,11

Table 21: Rated power P_2 and mass moment of inertia J[36)]

Size	Motor[38)]	Rated power P_2 [kW]	Mass moment of inertia J
		IE4	[kgm²]
PA3 400-290	76UW/XW	7,5	0,12

36 These values are valid for a density = 1 kg/dm³ and a kinematic viscosity of up to 20 mm²/s.
37 - = No efficiency classification
38 Motor version UW/XW is a synchronous motor with a synchronous speed of 1000 rpm.

AmaCan PA3 500-325, n = 960 rpm

Characteristic curves in acc. with ISO 9906 / 2 / 2B. n = speed

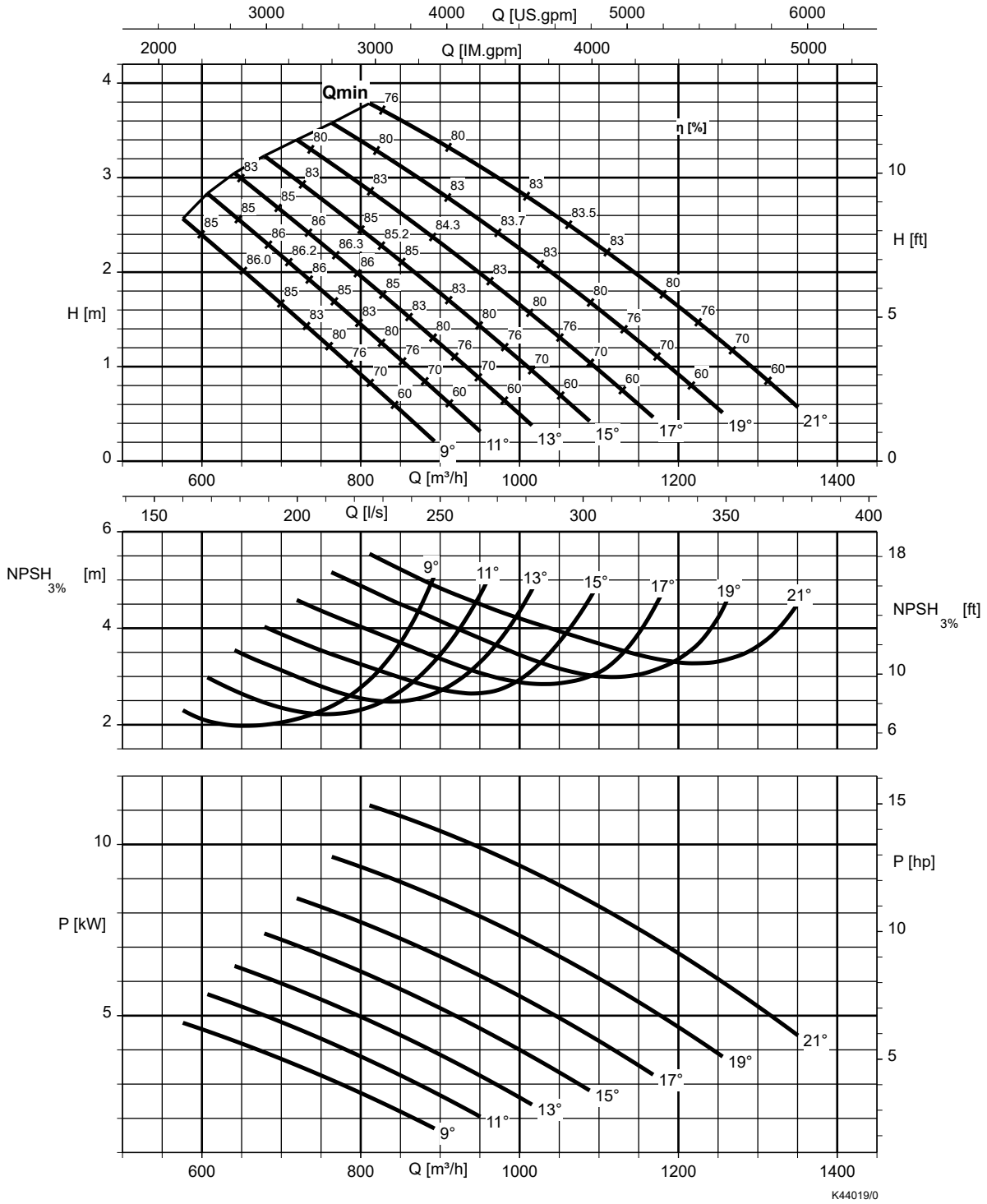

1580.58/01-EN

Table 22: Free passage

Angle [°]	Free passage [mm]	Angle [°]	Free passage [mm]
9	65	17	65
11	65	19	65
13	65	21	65
15	65		

Table 23: Rated power P_2 and mass moment of inertia J[39)]

Size	Motor	Rated power P_2 [kW]	Mass moment of inertia J
		-[40)]	[kgm²]
PA3 500-325	126UV/XV	11	0,23

Table 24: Rated power P_2 and mass moment of inertia J[39)]

Size	Motor[41)]	Rated power P_2 [kW]	Mass moment of inertia J
		IE4	[kgm²]
PA3 500-325	166UW/XW	16	0,25

39 These values are valid for a density = 1 kg/dm³ and a kinematic viscosity of up to 20 mm²/s.
40 - = No efficiency classification
41 Motor version UW/XW is a synchronous motor with a synchronous speed of 1000 rpm.

AmaCan PA4 700/800-471, n = 960 rpm

Characteristic curves in acc. with ISO 9906 / 2 / 2B. n = speed

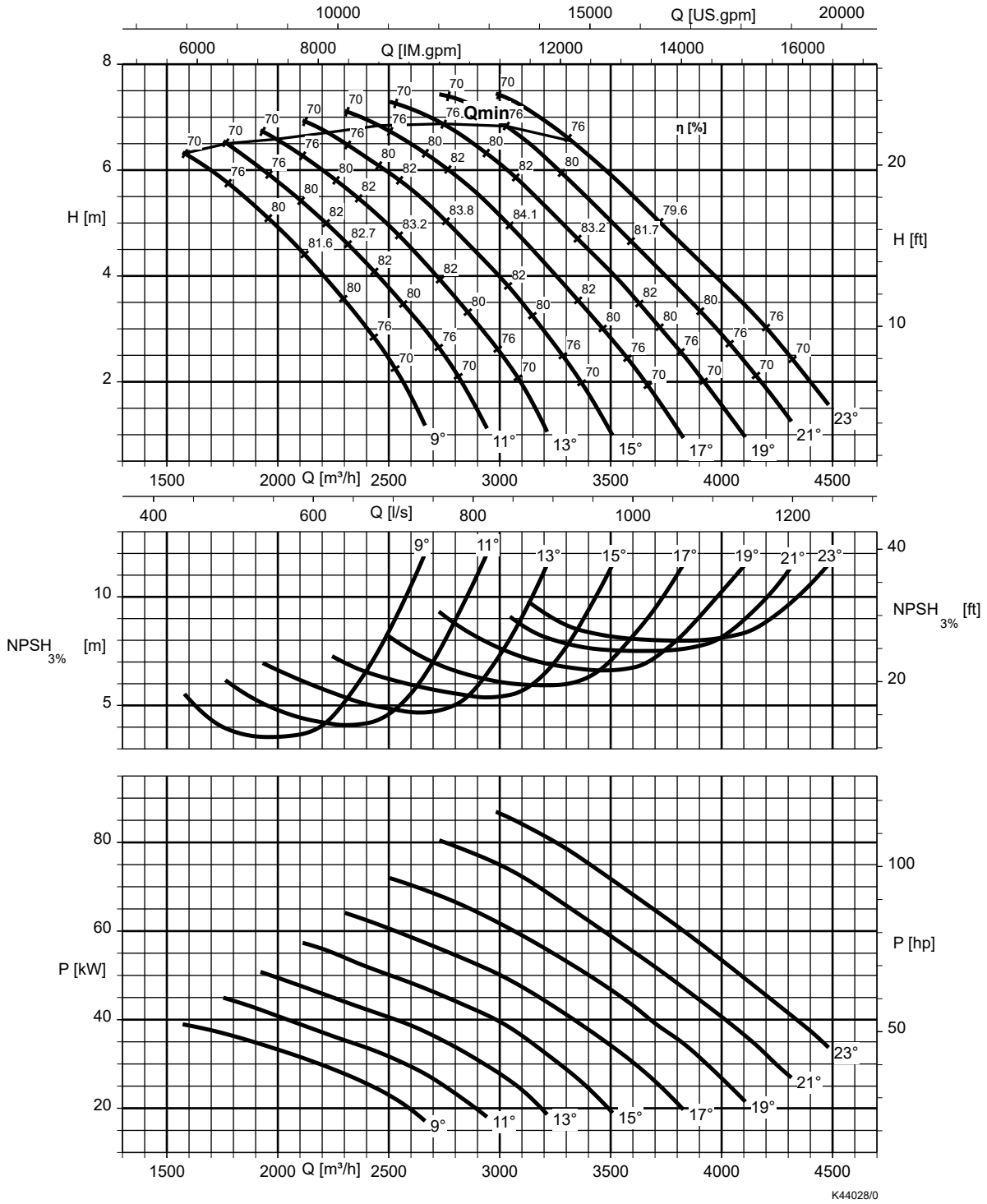

1580.58/01-EN

Table 25: Free passage

Angle [°]	Free passage [mm]	Angle [°]	Free passage [mm]
9	60	17	93
11	68	19	100
13	75	21	110
15	85	23	120

Table 26: Rated power P_2 and mass moment of inertia J[42)]

Size	Motor	Rated power P_2 [kW]		Mass moment of inertia J
		-[43)]	IE3	[kgm²]
PA4 700-471	476UT/XT	47	-	1,52
PA4 700-471	606UT/XT	60	-	1,52
PA4 700-471	806UT/XT	80	-	1,70
PA4 700-471	1006UT/XT	100	37	1,83
PA4 700-471	1206UT/XT	-	45	1,97

42 These values are valid for a density = 1 kg/dm³ and a kinematic viscosity of up to 20 mm²/s.

43 - = No efficiency classification

n = 725 rpm

AmaCan PA3 700/800-471, n = 725 rpm

Characteristic curves in acc. with ISO 9906 / 2 / 2B. n = speed

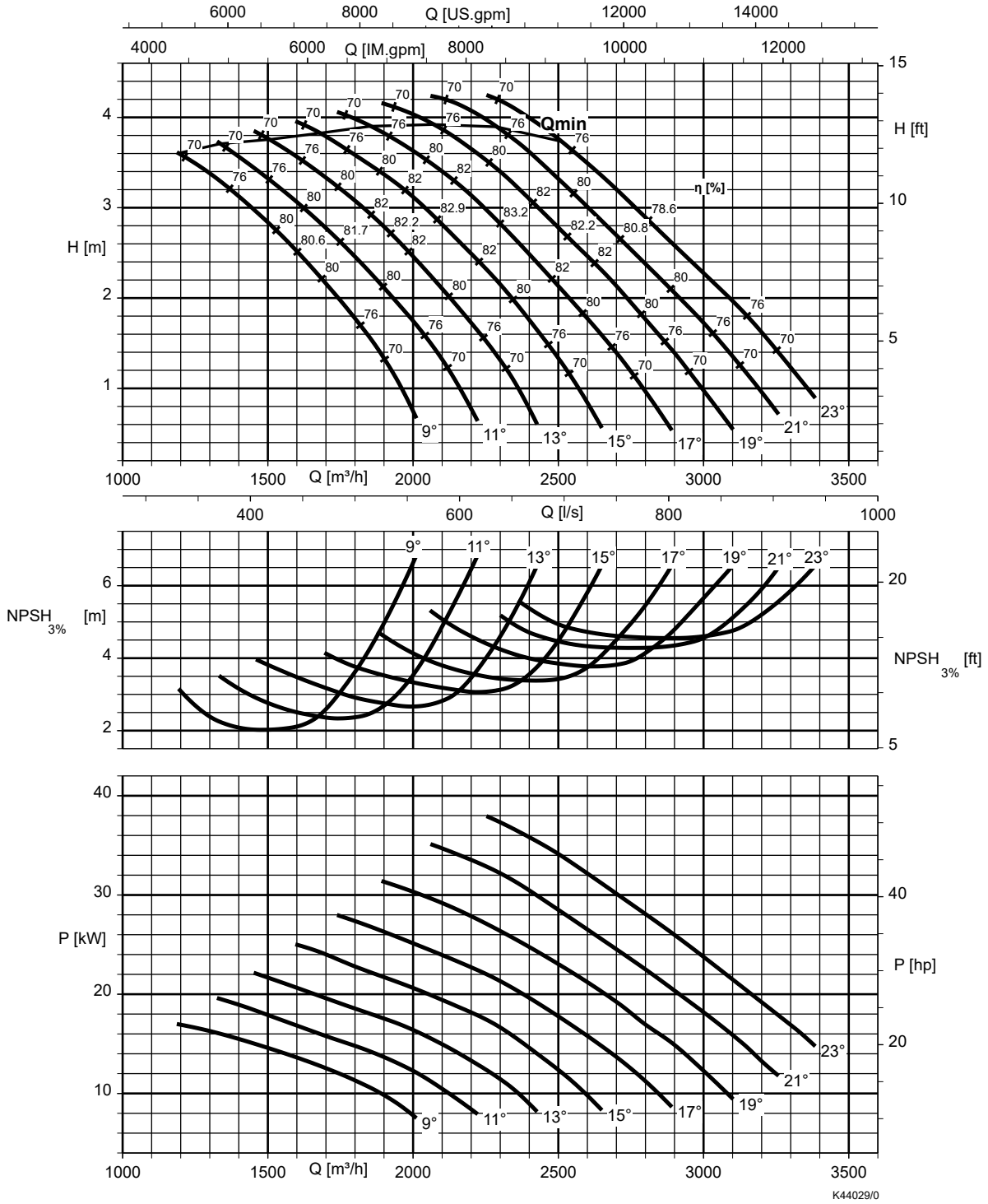

1580.58/01-EN

Table 27: Free passage

Angle [°]	Free passage [mm]	Angle [°]	Free passage [mm]
9	60	17	93
11	68	19	100
13	75	21	110
15	85	23	120

Table 28: Rated power P_2 and mass moment of inertia J[44)]

Size	Motor	Rated power P_2 [kW]		Mass moment of inertia J
		-[45)]	IE3	[kgm²]
PA4 700-471	308UT/XT	30	-	1,52
PA4 700-471	408UT/XT	40	18,5	1,52
PA4 700-471	508UT/XT	-	22	1,60
PA4 700-471	558UT/XT	55	-	1,70
PA4 700-471	708UT/XT	-	30	1,70
PA4 700-471	958UT/XT	-	45	1,97

44 These values are valid for a density = 1 kg/dm³ and a kinematic viscosity of up to 20 mm²/s.

45 - = No efficiency classification

Pump set dimensions

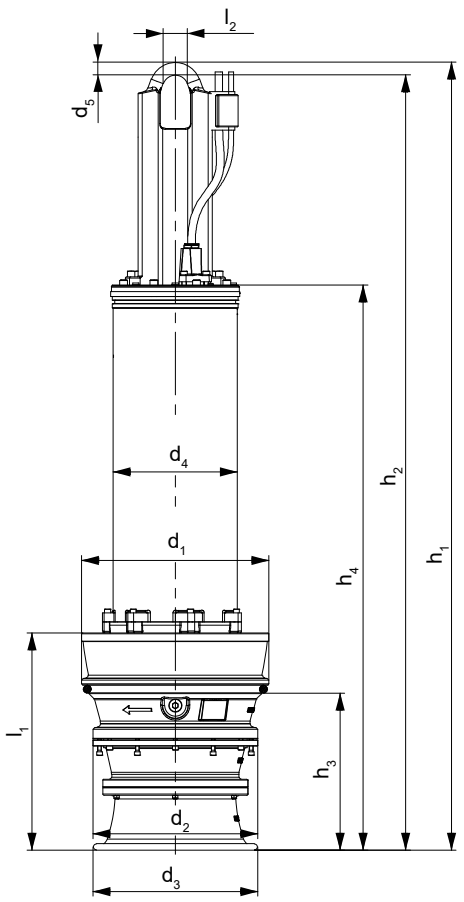

Fig. 1: Pump set dimensions

Table 29: Pump set dimensions

Size	Motor size	Number of poles	Motor version	d_1	d_2	d_3	d_4	d_5	h_1	h_2	h_3	h_4	l_1	l_2	[kg][46]
				[mm]											
400-290	11	4	UV/XV	386	336	336	226	8	1589	1581	232	1140	388	70	207
400-290	15	4	UV/XV	386	336	336	226	8	1589	1581	232	1140	388	70	213
400-290	18	4	UV/XV	386	336	336	226	8	1589	1581	232	1140	388	70	224
400-290	21	4	UV/XV	386	336	336	226	8	1589	1581	232	1140	388	70	234
400-290	7	6	UW/XW	386	336	336	226	8	1589	1581	232	1140	388	70	208
400-290	11	6	UW/XW	386	336	336	226	8	1589	1581	232	1140	388	70	208
400-290	15	6	UW/XW	336	336	336	226	8	1589	1581	232	1140	338	70	225
400-290	18	6	UW/XW	386	336	336	226	8	1589	1581	232	1140	388	70	234
500-325	22	4	UV/XV	480	372	420	270	30	1732	1557	433	1232	620	70	344
500-325	30	4	UV/XV	480	372	420	270	30	1732	1557	433	1232	620	70	357
500-325	34	4	UV/XV	480	372	420	270	30	1732	1557	433	1232	620	70	390
500-325	40	4	UV/XV	480	372	420	270	30	1732	1557	433	1232	620	70	415
500-325	12	6	UV/XV	480	372	420	270	30	1732	1557	433	1232	620	70	342
500-325	16	6	UW/XW	480	372	420	270	30	1732	1557	433	1232	620	70	345
500-325	25	6	UW/XW	480	372	420	270	30	1732	1557	433	1232	620	70	345
500-325	30	6	UW/XW	480	372	420	270	30	1732	1557	433	1232	620	70	395
500-325	40	6	UW/XW	480	372	420	270	30	1732	1557	433	1232	620	70	393
600-351	35	4	UV/XV	570	485	485	303	23	1797	1774	559	1369	820	70	518
600-351	45	4	UV/XV	570	485	485	303	23	1797	1774	559	1369	820	70	556
600-351	55	4	UV/XV	570	485	485	303	23	1797	1774	559	1369	820	70	574
600-351	60	4	UV/XV	570	485	485	303	23	1797	1774	559	1369	820	70	589

1580.58/01-EN

46 Pump set in material variant G3, with 10-metre power cable and 5-metre lifting rope. The indicated weights are reference values only. Refer to the data sheet for the exact weight.

Size	Motor size	Number of poles	Motor version	d_1	d_2	d_3	d_4	d_5	h_1	h_2	h_3	h_4	l_1	l_2	[kg][46]
				[mm]											
600-351	45	8	UW/XW	570	485	485	303	23	1797	1774	559	1369	820	70	519
600-351	57	8	UW/XW	570	485	485	303	23	1797	1774	559	1369	820	70	560
600-351	65	8	UW/XW	570	485	485	303	23	1797	1774	559	1369	820	70	575
700-471	47	6	UT/XT	675	585	585	385	40	2190	2150	429	1499	735	80	915
700-471	60	6	UT/XT	675	585	585	385	40	2190	2150	429	1499	735	80	915
700-471	80	6	UT/XT	675	585	585	385	40	2390	2350	429	1699	735	80	1045
700-471	100	6	UT/XT	675	585	585	385	40	2390	2350	429	1699	735	80	1091
700-471	120	6	UT/XT	675	585	585	385	40	2390	2350	429	1699	735	80	1111
700-471	30	8	UT/XT	675	585	585	385	40	2190	2150	429	1499	735	80	915
700-471	40	8	UT/XT	675	585	585	385	40	2190	2150	429	1499	735	80	928
700-471	50	8	UT/XT	675	585	585	385	40	2190	2150	429	1499	735	80	941
700-471	55	8	UT/XT	675	585	585	385	40	2390	2350	429	1699	735	80	1045
700-471	70	8	UT/XT	675	585	585	385	40	2390	2350	429	1699	735	80	1045
700-471	95	8	UT/XT	675	585	585	385	40	2390	2350	429	1699	735	80	1109
800-471	155	6	UT/XT	675	585	585	475	40	2711	2671	429	2020	735	80	1574
800-471	180	6	UT/XT	675	585	585	475	40	2711	2671	429	2020	735	80	1650

Installation types

Nine design variants are available[47]:

Table 30: Overview of installation types

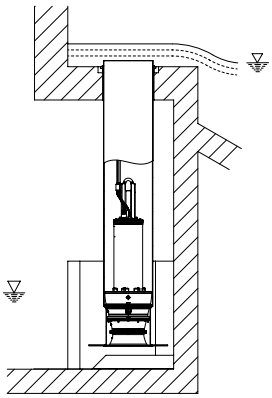	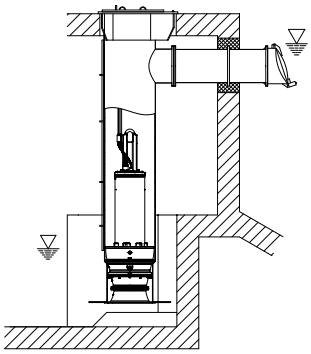	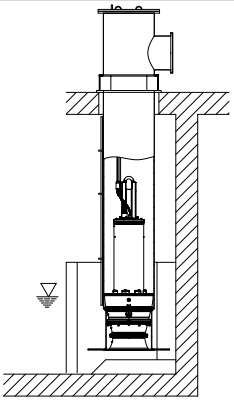
BU[48]/BUS[49] discharge tube	CU[48]/CUS[49] discharge tube	DU[48]/DUS[49] discharge tube
Design with overflow discharge for installation in open intake chamber	Design with underfloor discharge for installation in open intake chamber	Design with above-floor discharge nozzle for installation in open intake chamber
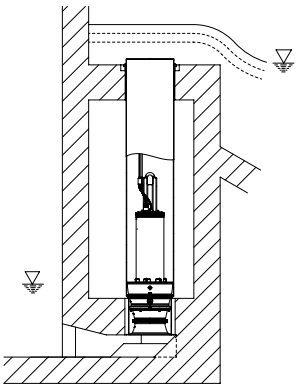	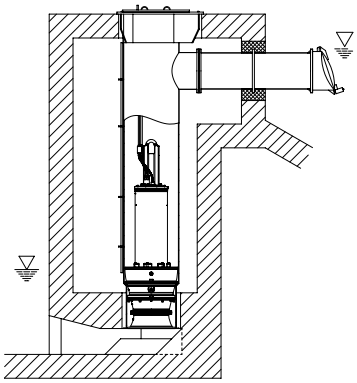	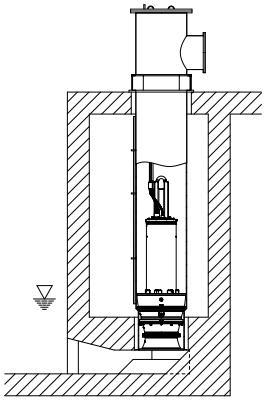
BG discharge tube[48]	CG discharge tube[48]	DG discharge tube[48]
Design with overflow discharge for installation in covered intake chamber for low suction-side water levels	Design with underfloor discharge for installation in covered intake chamber for low suction-side water levels	Design with above-floor discharge nozzle for installation in covered intake chamber for low suction-side water levels

1580.58/01-EN

47 For information on the various designs (foundation dimensions, intake chamber, etc.) refer to the general arrangement drawings.
48 Design without suction umbrella
49 Design with suction umbrella

Scope of supply

Depending on the model, the following items are included in the scope of supply:

- Pump set complete with power cables
- O-ring
- Back-up name plate

Optional accessories:

- Support rope
- Accessories for installing the cable guide:
  - Fitting
  - Turnbuckle
  - Support
  - Shackle
  - Cable clamps
- Cable support sleeves
- Flow-straightening vane to prevent floor vortices
- Discharge tube

Accessories

Dimensions of the flow-straightening vane

Design of the intake chamber wall surfaces (to prevent vortex formation)

The flow-straightening vane is indispensable for the inlet conditions of the pump set. It prevents the development of a submerged vortex (floor vortex) which could cause a drop in performance, for example. In addition, the floor and wall surfaces of the intake chamber should be designed as a rough concrete surface. Rough surfaces minimise the separation of boundary layers that may cause wall and floor vortices.

Flow-straightening vane and intake chamber

- The anti-swirl baffles in the bellmouth must be aligned with the flow-straightening vane.
- The bail of the pump is oriented in the same direction as the anti-swirl baffles in the bellmouth.

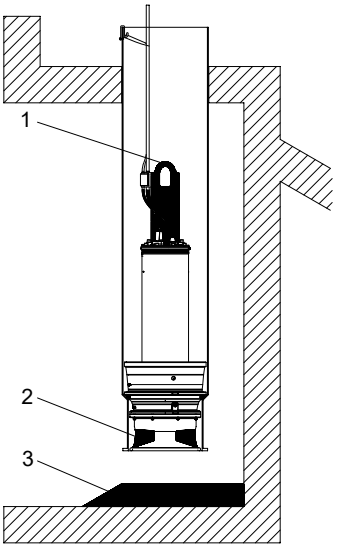

Fig. 2: Installation position of the pump set

1	Bail
2	Anti-swirl baffles
3	Flow-straightening vane

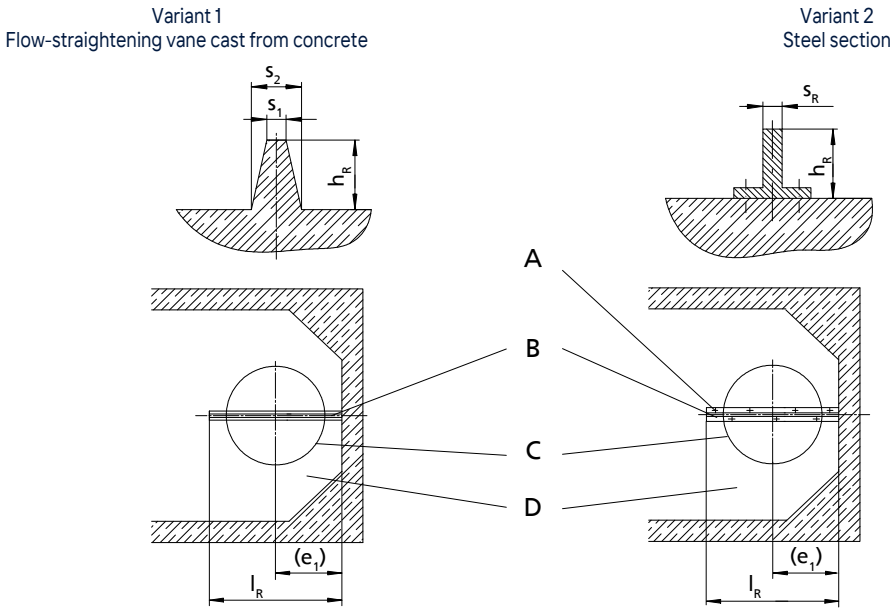

A	Bolted to the floor of the intake chamber
B	Flow-straightening vane centred beneath the discharge tube
C	Discharge tube
D	Intake chamber

1580.58/01-EN

Support rope and turnbuckle in the discharge tube

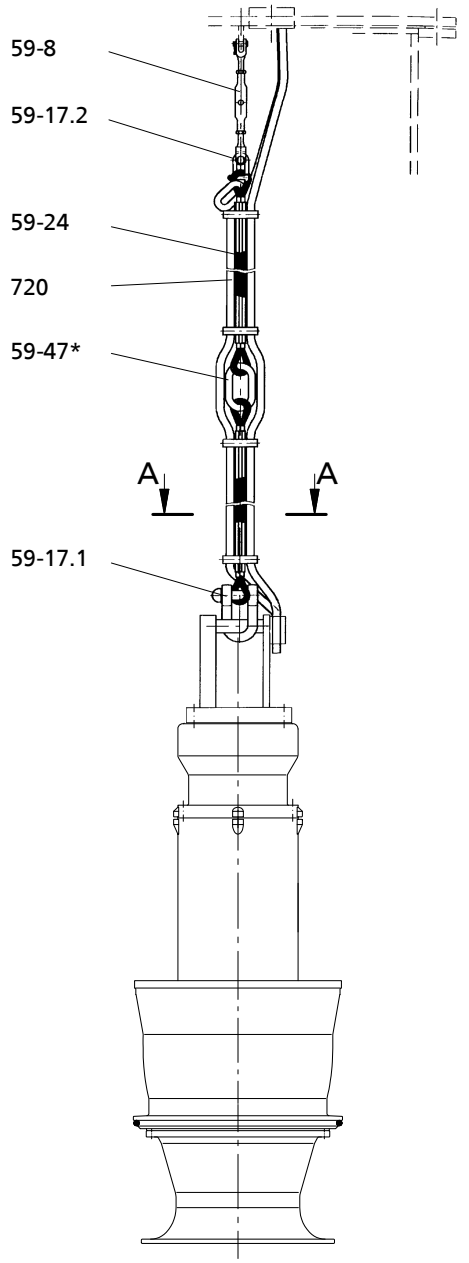

For large installation depths
(with support spacer)

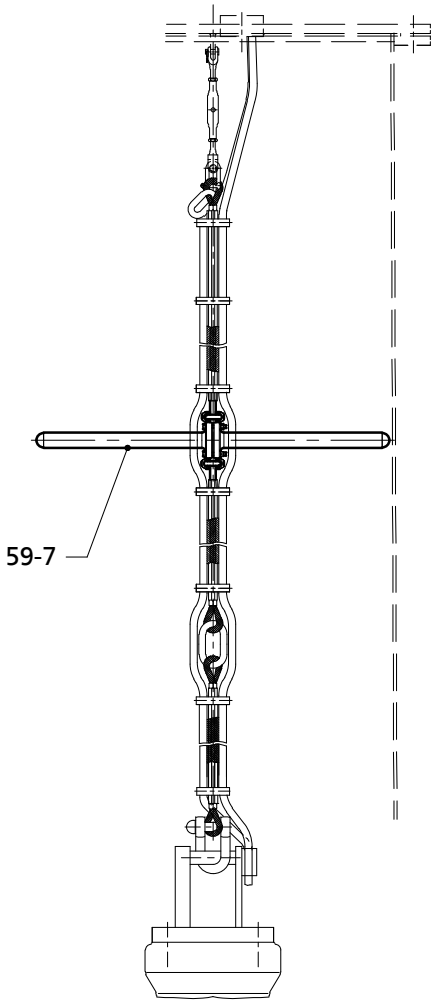

*= The number of (intermediate) lifting rings depends on the lifting height of the lifting equipment and on the building structure. (Intermediate lifting rings are supplied as an option).

Table 31: List of components

Part No.	Description	Material
59-8	Turnbuckle	Stainless steel
59-17.2	Shackle	Stainless steel
59-47	(Intermediate) lifting ring(s)	Stainless steel
59-24	Rope, low-rotation design	Stainless steel

Part No.	Description	Material
720	Fitting	EPDM
59-17.1	Shackle	Stainless steel (material option from a total weight of 4250 kg: steel)
59-7	Support	GFRP

Cross-section of cable support

A-A

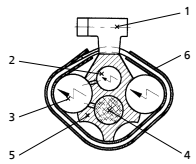

Table 32: List of components

Part No.	Description	Part No.	Description
1	Hose clip	4	Support rope 59-24
2	Control cable	5	Fitting
3	Power cable	6	Clamp cover

Discharge tube cover with cable gland

Design: with welding sleeve

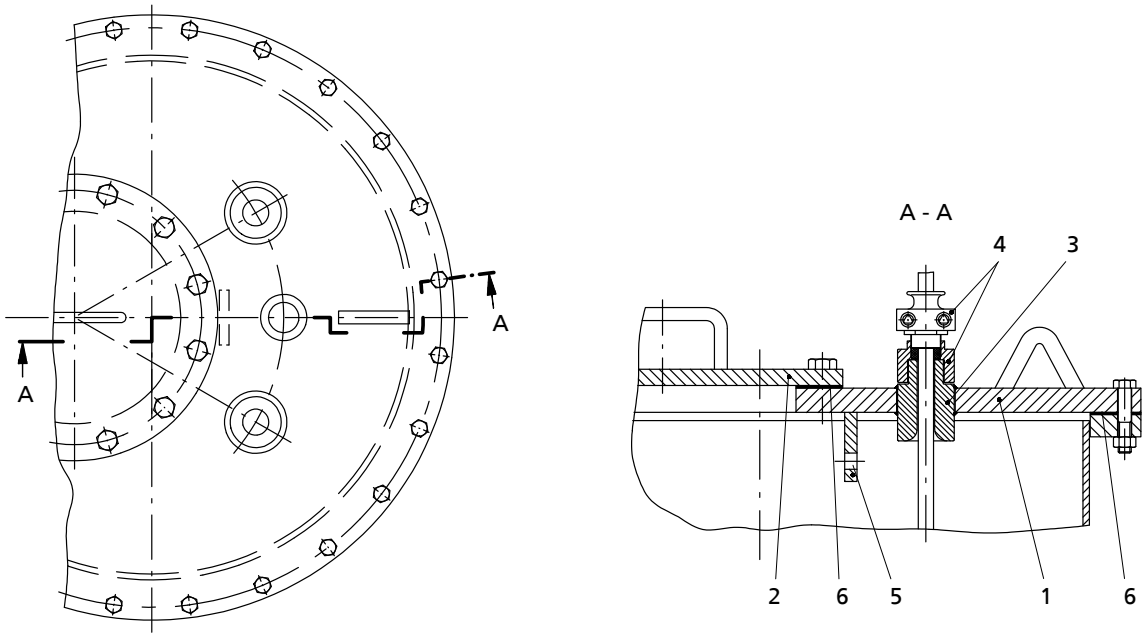

Fig. 3: Design variant with welding sleeve

Table 33: List of components

Part No.	Description	Part No.	Description
1	Discharge tube cover[50)]	4	Threaded bush with cable entry to DIN 22419 with strain relief and protection against kinking and twisting
2	Cover	5	Eyeplate for fastening the cable support (support rope)
3	Welding sleeve	6	Gasket, e.g. fabric-reinforced rubber

1580.58/01-EN

50 Discharge tube cover also available in split design.

Design variant with transit frame (up to 1 bar)

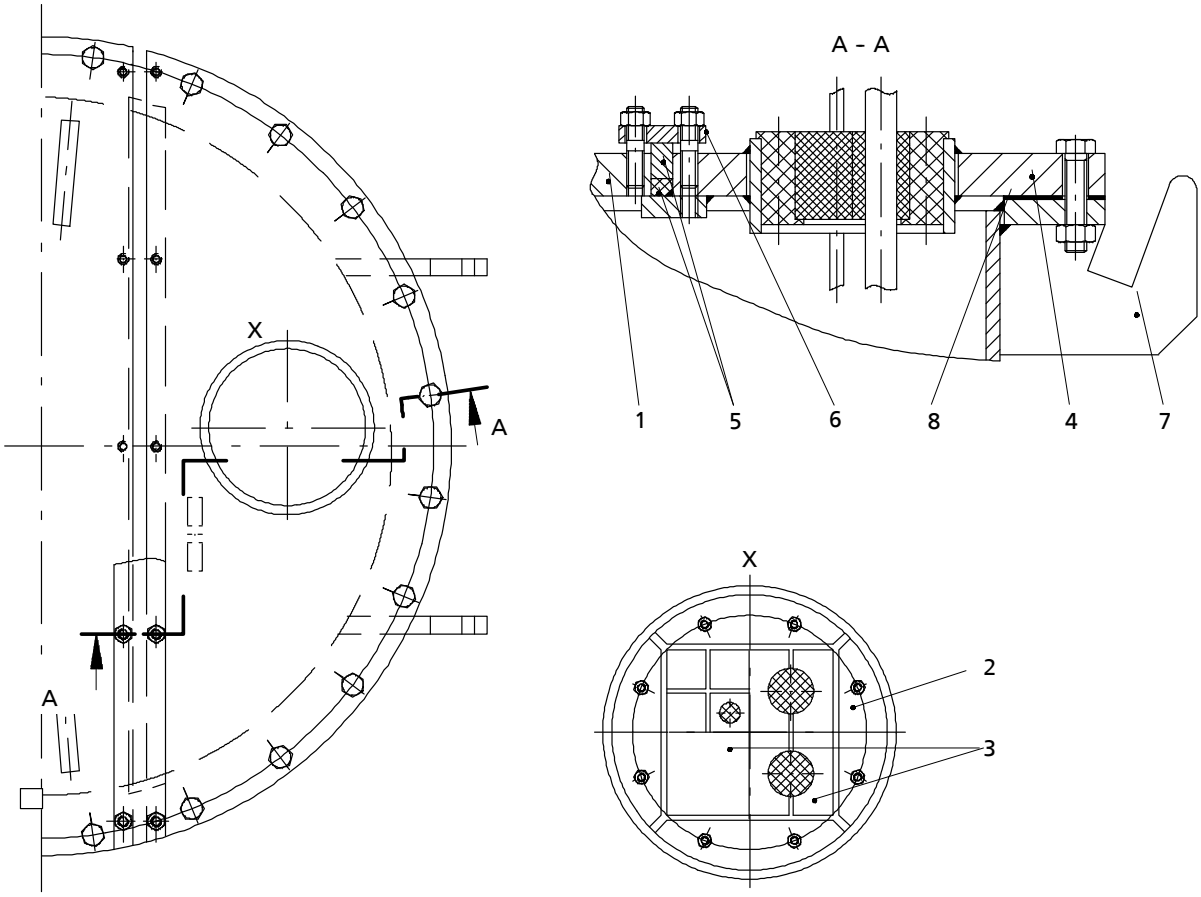

Fig. 4: Design variant with transit frame (up to 1 bar)

Table 34: List of components

Part No.	Description
1	Discharge tube cover[51)]
2	Transit frame (cable gland)
3	Packing blocks and insert blocks
4	Cover segment with cable gland
5	Closed-cell profile seal in groove between the two cover parts
6	Sealing arrangement of groove between the two cover parts
7	Support brackets for cover segment with cable glands
8	Gasket (e.g. rubber with fabric reinforcement)

51 Discharge tube cover also available in single-piece design.

General assembly drawings

AmaCan P 400-290
AmaCan P 500-325

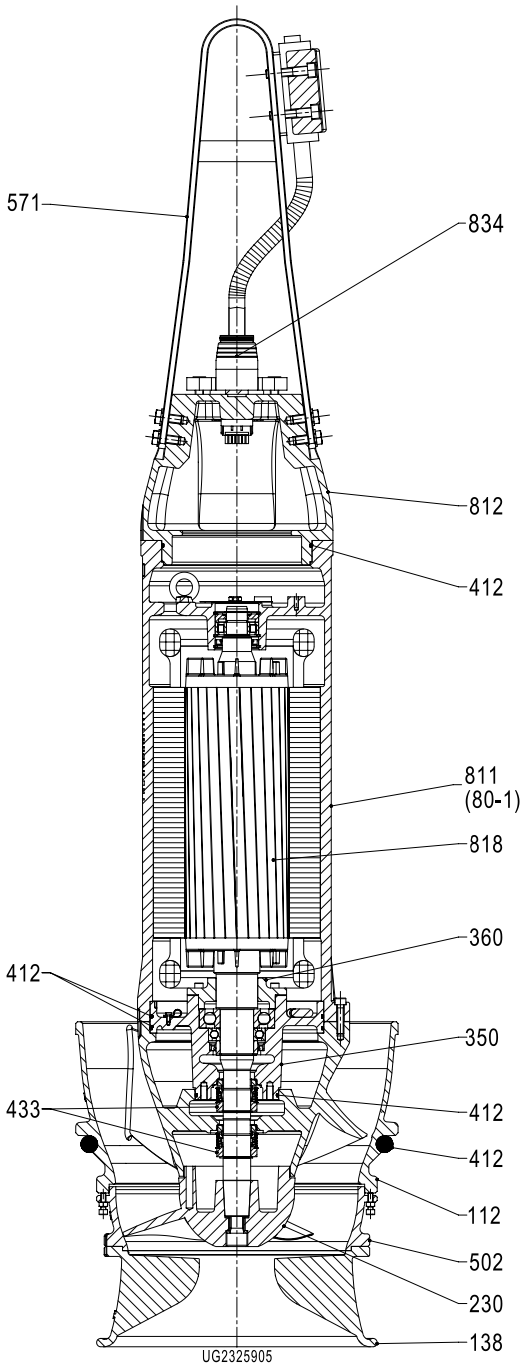

Table 35: List of components

Part No.	Description	Part No.	Description
112	Pump bowl	502	Casing wear ring
138	Bellmouth	571	Bail
230	Impeller	811	Motor housing
350	Bearing housing	812	Motor housing cover
360	Bearing cover	818	Shaft (rotor)
412	O-ring	834	Cable gland
433	Mechanical seal	-	-

AmaCan P 600-351
AmaCan P 700-471
AmaCan P 800-471

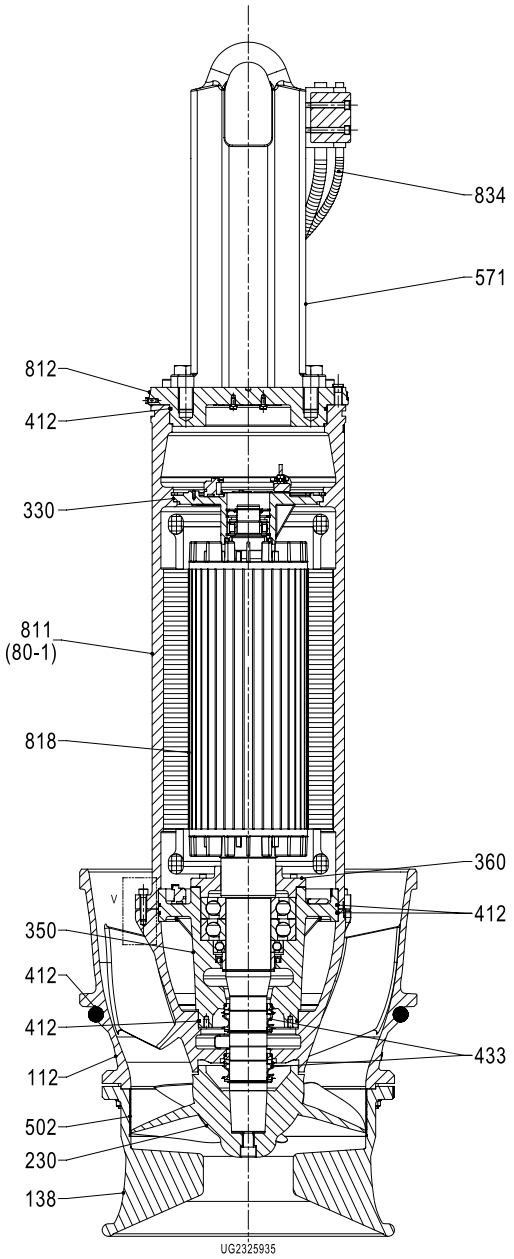

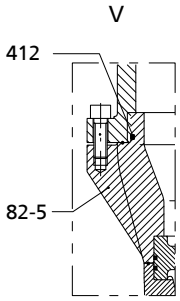

Table 36: List of components

Part No.	Description	Part No.	Description
112	Pump bowl	502	Casing wear ring
138	Bellmouth	571	Bail
230	Impeller	811	Motor housing
330	Bearing bracket[52)]	812	Motor housing cover
350	Bearing housing	82-5	Adapter[53)]
360	Bearing cover	818	Shaft (rotor)
412	O-ring	834	Cable gland
433	Mechanical seal	-	-

52 Not on size 600-351
53 On size 800-471

2025-07-11

1580.58/01-EN

KSB SE & Co. KGaA
Johann-Klein-Straße 9 • 67227 Frankenthal (Germany)
Tel. +49 6233 86-0
www.ksb.com